Engineering Report

Lake Michigan Water Feasibility Study

Northern Lake County Lake Michigan Water Planning Group

November 2007

AppliedTechnologies
Engineers - Architects
300 North Milwaukee Avenue, Suite E • Lake Villa, Illinois 60046

4060

Engineering Report

Lake Michigan Water Feasibility Study

Northern Lake County Lake Michigan Water Planning Group

November 2007

Prepared By

Applied Technologies, Inc.
300 North Milwaukee Avenue, Suite E
Lake Villa, IL 60046
847-265-7325

PN4060 ©Applied Technologies, Inc., 2007

TABLE OF CONTENTS

TITLE PAGE

SECTION 1 – EXECUTIVE SUMMARY 1-1

SECTION 2 – INTRODUCTION 2-1
Background 2-2
Scope of Study 2-4

SECTION 3 – COMMUNITY WATER SYSTEMS 3-1
Antioch 3-1
Fox Lake 3-3
Grandwood Park 3-4
Lake Villa 3-6
Lindenhurst 3-7
Northwest Region 3-9
Old Mill Creek 3-9
Wauconda 3-9

SECTION 4 – POPULATION AND WATER DEMAND 4-1
Current Situation 4-1
Future Situation 4-3

SECTION 5 – WATER QUALITY AND QUANTITY 5-1
Lake County Sources of Water 5-1
Ground Water 5-1
Ground Water Softening/Treatment 5-3
Lake Michigan Water 5-4
Relationship to Property Values 5-5

SECTION 6 – LAKE MICHIGAN WATER SUPPLY 6-1
Lake County Public Water District Facilities 6-1
Raw Water Intake 6-2
Raw Water Low Lift Pump Station 6-2
Raw Water Transmission Line 6-3
Water Treatment Plant 6-3
On Site Storage 6-4
High Service Pumping 6-4
Water Transmission/Distribution Mains 6-4
Proposed Facilities 6-5
Cost Evaluation 6-6
Financing 6-9

SECTION 7 – ORGANIZATION AND MANAGEMENT..... 7-1
Organization..... 7-1
Public Water District..... 7-1
Water Commission..... 7-2
Joint Action Water Agency..... 7-3
Management..... 7-3

SECTION 8 – ALLOCATION AND PERMITTING ISSUES..... 8-1
Allocations..... 8-1
Permitting..... 8-3

SECTION 9 – CONCLUSION AND RECOMMENDATIONS..... 9-1
Conclusions..... 9-1
Recommendations..... 9-2

APPENDIX A
Table A-1 Total Estimated Project Cost
Table A-2 Pipeline Costs
Table A-3 Jack and Bore Piping Costs

APPENDIX B
Table B-1 Equalized Assessed Valuation
Table B-2 Scenario Number One, Special Service Area Bonds
Table B-3 Scenario Number One, Water Revenue Bonds
Table B-4 Scenario Number One, Bond Analysis
Table B-5 Scenario Number One, Water Unit Rates
Table B-6 Scenario Number Two, Special Service Area Bonds
Table B-7 Scenario Number Two, Water Revenue Bonds
Table B-8 Scenario Number Two, Bond Analysis
Table B-9 Scenario Number Two, Water Unit Rates
Table B-10 Scenario Number Three, Special Service Area Bonds
Table B-11 Scenario Number Three, Water Revenue Bonds
Table B-12 Scenario Number Three, Bond Analysis
Table B-13 Scenario Number Three, Water Unit Rates
Table B-14 Water Rate Summary

LIST OF TABLES

Table 3-1 Village of Antioch, Water System Overview 3-2
Table 3-2 Village of Fox Lake, Water System Overview 3-3
Table 3-3 Grandwood Park, Water System Overview 3-5
Table 3-4 Village of Lake Villa, Water System Overview 3-6
Table 3-5 Village of Lindenhurst, Water System Overview 3-8
Table 3-6 Village of Wauconda, Water System Overview 3-10
Table 4-1 Present Water Demand Year 2005 4-2
Table 4-2 Present Population and Per Capita Water Demand Year 2005 . 4-3
Table 4-3 Future Population and Average Water Demand Year 2030 4-4
Table 4-4 Future Water Demand Year 2030 4-5
Table 4-5 Population and Water Demand Projections 4-6
Table 6-1 Total Estimated Project Cost August 2007 6-7

LIST OF FIGURES Follow Page

Figure 1-1 System Map 1-2
Figure 6-1 Water Treatment Site Plan 6-5
Figure 6-2 System Map 6-6
Figure 6-3 System Schematic 6-6

SECTION 1
EXECUTIVE SUMMARY

The communities and governmental entities that comprise the Northern Lake County Lake Michigan Water Planning Group (referred to as the "Planning Group") are facing an uncertain future with regard to their water supply. These communities include the Villages of Antioch, Fox Lake, Lake Villa, Lindenhurst, Old Mill Creek, Wauconda and portions of the Lake County operated systems. The Planning Group's continued ability to respond to growth requirements, current and future regulatory requirements, and unknown levels of quality and quantity in their current well supply needs to be addressed for the long term.

Water resources in the Chicago metropolitan area are finite, in spite of the seemingly endless quantities of water nearby. The Planning Group as a whole is growing at a pace to double its population and water usage in the near future. Questions remain as to whether there will be adequate quantities and good quality groundwater available to meet these demands. Ongoing studies will help answer these questions. In the meantime, the Planning Group has undertaken this study to determine whether Lake Michigan is a viable alternative to the continued use of groundwater wells.

This feasibility study is being undertaken at an opportune time. The communities are beginning to expend considerable sums of money for additional wells and treatment, and this trend will likely continue. Furthermore, the window of opportunity for Lake Michigan water as a source may be diminishing. This feasibility study was undertaken to provide the Planning Group with additional options for its water supply future with sufficient information to make an informed decision. Considerable expenditures to the water supply systems are going to be forthcoming regardless of the option chosen. It then comes down to the best use of available resources for all communities in the Planning Group to provide their customers with a sufficient quantity of high quality water.

At the onset of this study, meetings were held to familiarize everyone in the Planning Group with the process and establish ground rules and procedures. Those meetings have continued to the present time. Meetings were held with each community to determine current and expected growth of the population and water usage. The current population in the service area for the Planning Group is 66,442 with a current daily average water demand of 6.10 million gallons per day (mgd). The population is projected to grow to 126,531 by the year 2030 with a daily average water demand of 11.86 mgd and a maximum day water demand of 20.76 mgd.

Each community was asked for its input as to the preferred connection point(s) for Lake Michigan water. These connection points were used in conjunction with the maximum day water demand to calculate the sizing of a water treatment plant, and the routing and sizing of water transmission mains, reservoirs, and pump stations. Early in the planning process, it was decided that the Lake County Public Water District (LCPWD) in Zion should be approached about utilizing a portion of its water treatment plant facilities and land.

An evaluation of the LCPWD water treatment plant found that it does not possess the treatment capacity necessary to serve both current and future Planning Group requirements. It was determined that a new "stand alone" water treatment plant would be constructed on the LCPWD plant site. The LCPWD has sufficient property available for both the current and future needs of the Planning Group. The new water treatment plant would utilize submerged membrane technology that has been previously pilot tested by the LCPWD. This technology is gaining much favor, especially on the Great Lakes, due to its high degree of treatment and relatively low cost.

After several meetings and discussions with all parties involved, a preliminary design for the water system was completed. Figure 1-1 shows the overall layout of the proposed system. The proposed facilities include a new low lift pump station along Lake Michigan that is connected to the existing LCPWD water intake. The low lift station would pump through a new 36-inch diameter raw water transmission main from the lakefront to the new water treatment plant. The new water treatment facilities would be installed at the plant in a separate structure, including the necessary membrane units and high service pumps. A new 3.0 million gallon ground storage tank would be constructed on the water treatment plant site to serve as emergency storage, operational storage, and finished water feed for new high service pumps that pump through the water transmission mains to the communities.

Figure 1-1 shows a system of approximately 45 miles of water transmission mains ranging in size from 10-inch to 36-inch. The transmission system begins at the water treatment plant and generally proceeds west along Route 173 (except in Zion) to Route 45, south to Miller Road where there would be a booster pump station and a 3.0 million gallon ground storage reservoir. The booster pumps would be configured to deliver treated water to two legs of the pipeline network. In the vicinity of the southern leg of the piping system, it is anticipated that an additional booster pumping station and 1.0 million gallon reservoir would be required to convey water to Fox Lake and Wauconda. At the connection points, water would be delivered to the member community's ground storage

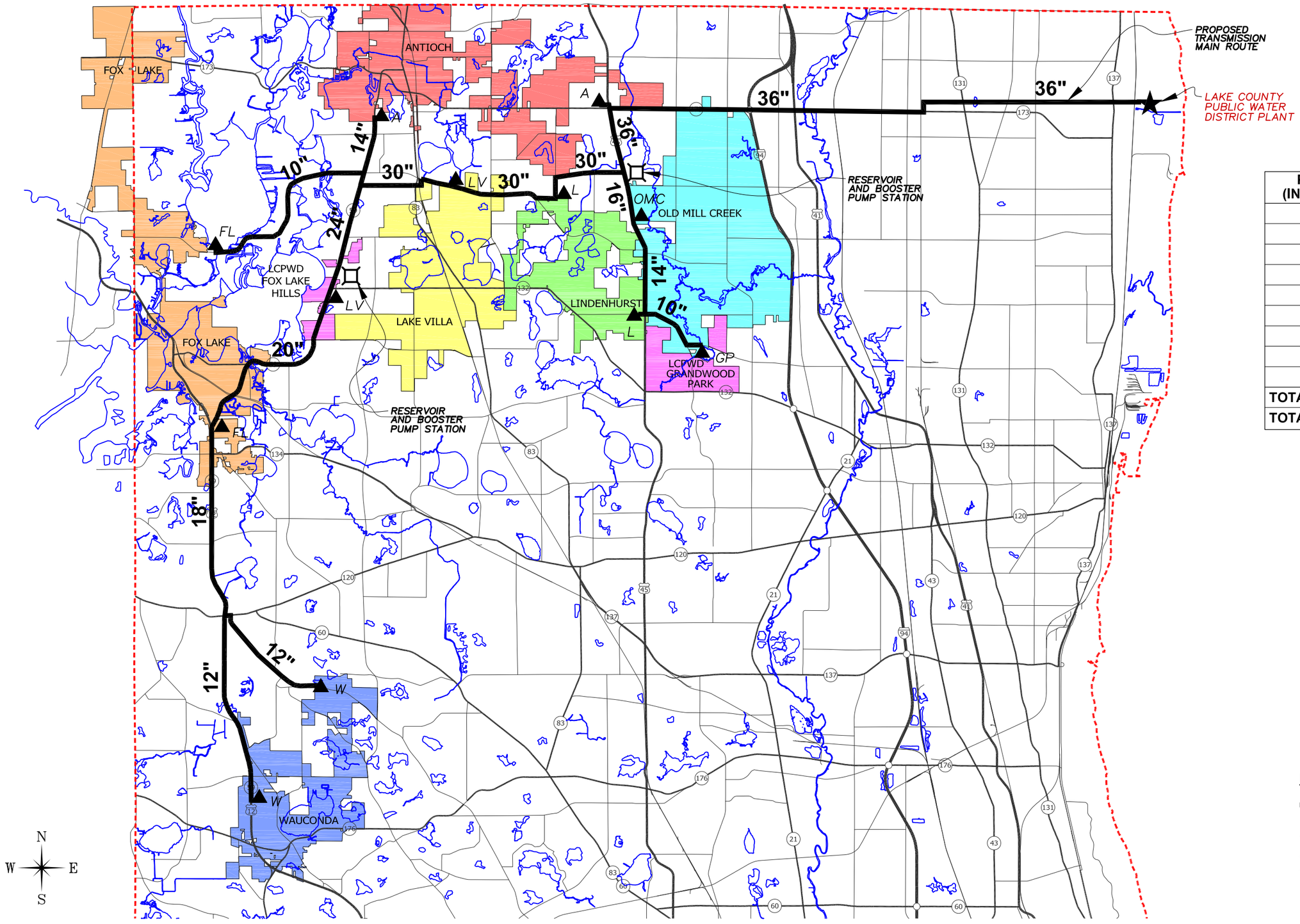

PIPE (INCHES)	LENGTH (FEET)
36	71,000
30	31,000
24	12,000
20	21,000
18	20,000
16	7,000
14	13,000
12	34,000
10	29,000
TOTAL (FEET)	238,000
TOTAL (MILES)	45

LEGEND

- TRANSMISSION MAIN ROUTE
- COMMUNITY CONNECTION POINTS
- RESERVOIR BOOSTER PUMP STATION

0 5 10,000 15 20,000

SCALE: 1" = 10,000'

Applied Technologies
Engineers-Architects

FIGURE 1-1
SYSTEM MAP
LAKE MICHIGAN WATER FEASIBILITY STUDY
Lake County, Illinois

O:\4000 to 4499\4560\GRAPHICS\DRAWINGS\FIGURE 1-1.dwg

reservoirs. A metering vault with control valves would meter and control the flows to each connection point.

The next crucial step was to provide an estimate of cost and effect on rates for the delivery of Lake Michigan water. Cost estimates were prepared, and a financial consultant was engaged to assist with the various financing schemes. Consequently, a series of options was developed consisting of several combinations of financing methods including revenue from water rates, future connection fees, special service areas and bond issues.

The estimated project cost for the system is $178,410,000. For a typical resident/customer, a special service area tax would be approximately $188 per year. The estimated wholesale water rate (exclusive of additional community costs) would be $2.63 per 1,000 gallons. To finance future growth needs, a $3,000 connection fee would be proposed for customers who connect to the system after a date to be determined. These options are discussed in more detail in Section 6.

The Planning Group has decided that presentations should be made to every community/potential member to fully discuss all of the ramifications of this undertaking. The meetings will provide a sense of "buy in" and provide feedback on the operating and financing scenarios that may work best for each community. The communities must commit to continuing on their current paths or to pursuing the usage of Lake Michigan water so as to determine where best to allocate their limited resources in the future.

If this project proceeds, each member community will need to review their proposed short and long term water system improvements. If a Lake Michigan goal is realized, then the communities may want to modify and/or delay certain improvements that would not be of benefit after the commencement of the Lake Michigan water project. For example, internal water main improvements that have already been planned can be modified as necessary to accept a revised delivery scheme. Wells may need to be drilled and equipped with an eye towards future abandonment.

This study effort has determined that the delivery of Lake Michigan water to the communities in the Planning Group is feasible. The administrative, technical and financial issues to overcome are substantial and will require the united effort and dedication of all Planning Group members. The ultimate reward will be sufficient high quality Lake Michigan water servicing all of the area's customers.

In summary, it is the recommendation of this study that the Planning Group proceed to the next step in the lengthy process of obtaining Lake Michigan water. Section 9, Conclusions and Recommendations, details the necessary administrative steps. In general, key elements to be undertaken include an initial meeting and subsequent application for a Lake Michigan allocation with the IDNR, formative meetings to discuss an intergovernmental agreement, and continued financial assistance including short term financing to move the process forward. Legal counsel will need to be obtained to assist with the formation of the Planning Group. Engineering services will be needed to identify and address the project's technical issues. Financial consultants will also be needed to continue developing the selected financing scheme.

SECTION 2
INTRODUCTION

The communities in northern Lake County are at a crossroads. The area has experienced substantial growth and this is projected to continue. Population growth is taxing the community's infrastructure, including in particular, the ability to provide adequate, high quality water. The County and its northern municipalities have expended substantial funds to increase the capacity and capabilities of their respective water systems, and this trend will not likely diminish.

The area currently relies on ground water from both shallow and deep well aquifers for its water supply. Ground water supplies may not be able to meet the water demands imposed by growth due to the quality and quantity limitations of the available ground water. Water quality has become a major issue since well water quality is declining and water quality standards are becoming more stringent, resulting in the need for expensive water treatment facilities. Declining water quality places additional strain on residents, as home water treatment units become more of a necessity, particularly softening systems, because well water is typically very hard.

In response to the area's concern about the future availability of adequate, high quality water, Lake County and a number of its local communities have banded together to investigate other options, particularly the option of using treated Lake Michigan water. The Northern Lake County Lake Michigan Water Planning Group (referred to as the "Planning Group" in this report) was formed to determine the feasibility of a Lake Michigan water supply system to accommodate the expected continued growth of the northern Lake County area. The Planning Group decided to investigate the utilization of Lake Michigan as a water supply source for the area by engaging an engineering consultant.

Many area residents presently enjoy a reliable water supply from either the Lake County Department of Public Works (LCDPW) or their local municipality. There are also a substantial number of residents using private wells. If private wells in the unincorporated (or incorporated) areas diminish in quantity and water quality, these areas may seek a higher quality source of water by approaching the surrounding communities for a public water supply. Continued growth will affect the water supply by taxing the capacity of existing wells, requiring the construction of new wells to further draw down the ground water supply, and forcing the use of lower quality ground water. Much of Lake County currently receives Lake Michigan water from various wholesale or retail sources. Lake

Michigan water is of high quality, requiring only conventional treatment and disinfection for use as a potable water supply. At issue, however, is the fact that Lake Michigan water, particularly that portion that is removed from the lake and not returned, is subject to stringent withdrawal requirements that will be discussed later in the report.

The purpose of this study is to evaluate the feasibility of treating and conveying Lake Michigan water to supply potable water to the Northern Lake County area. The Planning Group conducting this study is composed of the Lake County Department of Public Works and the following communities:

- Antioch
- Fox Lake
- Lake Villa
- Lindenhurst
- Old Mill Creek
- Wauconda

Lake County supplies water to the following unincorporated areas that are included in this study as well:

- Grandwood Park
- Northwest Region, including:
  - Petite Lake
  - Fox Lake Hills
  - Stanton Bay

BACKGROUND

Lake County is an integral part of the six county greater Chicago metropolitan area, located north of the City of Chicago and Cook County and bordering the State of Wisconsin. Lake Michigan is located to the east, with McHenry County to the west. The Chicago area has been on a continued course of expansion since its founding in the mid nineteenth century. Chicago is a world class city, and expansion of the metropolitan area has been accommodated throughout the years by expansion of the urban/suburban areas into the neighboring counties. Lake County has been a part of this expansion, but has also served as an independent county in its own right.

Various components of the Chicago metropolitan area infrastructure have been fully integrated into regional systems, including in particular, the highway systems, the rail mass transit system, and the electrical power, natural gas, telephone and cable utilities. Other utilities, particularly water supply, remain as local or sub-regional functions.

Traditionally, those communities adjacent to Lake Michigan have utilized the lake as their water source. This has been the case since the mid to late 1800s. Chicago, Evanston, and the North Shore have utilized lake water for over 100 years. Due to the topographical features of the area west of the lake, Chicago area communities withdrew water from the lake, but did not return it to the lake, resulting in a net drain from the Great Lakes Basin. This includes water supply, sanitary and storm drainage, navigation/lockage and leakage, and requirements for sewage dilution in the Chicago Sanitary and Ship Canal. The diverted waters were discharged to the Des Plaines River, the Illinois River, and ultimately to the Mississippi River and Gulf of Mexico.

In the current era, the practice of withdrawing water from Lake Michigan (or other Great Lakes) has become the subject of multi-state and Canadian province discussions and agreements regarding the entire Great Lakes system. The State of Illinois, unlike all other Great Lake states and Canadian provinces, is governed by procedures and limits instituted by a United States Supreme Court decree to control the outflow from Lake Michigan. Therefore, the amount of Lake Michigan water available by decree to be withdrawn and not returned is 3,200 cubic feet per second, or approximately 2.1 billion gallons per day. The 3,200 cubic feet per second "withdrawal" rate of water is allocated through the Illinois Department of Natural Resources, Office of Water Resources.

The Chicago Lake Michigan water supply serves Chicago and many of its neighboring communities in Cook County. Communities outside of this lake water system have utilized various kinds of wells for their water supplies. As substantial growth continued over the years, well supply became problematic and in some cases, well water levels were dropping over one foot per month. Many segments of the greater metropolitan area, including Lake County, experienced difficulties with ground water supplies.

Revised Lake Michigan water allocation procedures were instituted in 1980. Large suburban areas addressed the well issue by switching to Lake Michigan as a water source. Notably, this includes the Du Page Water Commission, Northwest Water Commission, Northwest Municipal Suburban Joint Action Water Agency, Central Lake County Joint Action Water Agency, and a number of smaller groups and/or individual communities.

This amounts to well over 1 million people who have converted to Lake Michigan water in the last 20 years.

SCOPE OF STUDY

As previously discussed, the use of Lake Michigan as a water supply source is well established in the area. This study will investigate the feasibility of using Lake Michigan water for the Planning Group. This is the first phase of an overall planning effort that would be required by the Planning Group to utilize Lake Michigan water. The following issues will be discussed:

- Existing community water systems
- Population and water demand
- Water quality and quantity
- Lake Michigan water supply
- Organization and management
- Permitting and allocation issues
- Recommendations and conclusions

SECTION 3
COMMUNITY WATER SYSTEMS

The Northern Lake County Lake Michigan Water Planning Group is comprised of the LCDPW and six individual communities. The LCDPW provides potable water supply, treatment and distribution throughout areas of Lake County. Individual communities within the county have the option of contracting with the LCDPW for water services, providing these services themselves, or working with other suppliers. Communities in this Planning Group own and operate their own water systems.

Unless otherwise noted, the population estimates and forecasts presented in this report are from Chicago Metropolitan Area Planning (CMAP), formerly the Northeastern Illinois Planning Commission (NIPC).

ANTIOCH

The historical resort town of Antioch is located in northwest Lake County. The Village was founded in the mid nineteenth century and quickly became a popular vacation spot for boating, fishing, hunting, and other leisure activities. The Village currently has thriving commercial developments along Illinois Routes 59, 83, and 173.

The Village of Antioch's population reached 13,800 in 2005 as the community continues to grow and annex property east to Highway 45. The 2005 water use records for the Village indicate a daily pumping average of 1.44 million gallons per day (mgd) with a maximum day of 2.80 mgd. Water system capacity for the Village of Antioch has recently been improved with the installation of two deep wells and a radium removal treatment system. Table 3-1 on the following page displays the current infrastructure associated with the Village's municipal water system.

The CMAP 2030 population forecast for Antioch, Illinois is 30,594. This population forecast results in a future average water demand of 3.18 mgd.

The most recent water model report, prepared by Smith Engineering, indicates that the continued growth of Antioch will require over 1,400 gpm of additional pumping capacity and 1.0 million gallons of additional storage.

The report recommended the construction of five shallow wells, two elevated storage tanks, and associated transmission main improvements.

TABLE 3-1
Village of Antioch
Water System Overview

Wells	**Capacity (gpm)**
Shallow Wells	
1	180
2	230
3	420
5	700
6	380
7	700
8	350
Deep Wells	
9	600
10	900
Total Pumping Capacity	**4,460 gpm**
Reservoirs	
Elevated Storage Tank	200,000 gal
Elevated Storage Tank	300,000 gal
Elevated Storage Tank	500,000 gal
Ground Storage Tank	1,000,000 gal
Total Storage Capacity	**2,000,000 gal**

FOX LAKE

The Village of Fox Lake is located in northwest Lake County. The Village was incorporated in 1907 and quickly became a favored destination for hunting, fishing, boating and vacationing. The Village of Fox Lake is surrounded by the Chain of Lakes and continues to experience steady growth as summer homes and resorts are being replaced by permanent residences.

TABLE 3-2
Village of Fox Lake
Water System Overview

Wells	**Capacity (gpm)**
Shallow Wells	
2	325
4	710
5	880
1-Tall Oaks	300
2-Tall Oaks	600
Deep Wells	
1	225
Total Pumping Capacity	**3,040 gpm**
Reservoirs	
Elevated Storage Tank	500,000 gal
Elevated Storage Tank	250,000 gal
Total Storage Capacity	**750,000 gal**

The CMAP 2030 population forecast for the Village of Fox Lake is 12,589. This population forecast results in a future water daily average demand of 1.51 mgd. Since the South Distribution System is almost entirely built out, any future growth will take place in the Tall Oaks Distribution System. This system will eventually reach north to the Illinois-Wisconsin border and west into McHenry County.

The Village of Fox Lake's population reached 10,700 in 2005; however, only 7,000 residents currently utilize municipal water. The 2005 water use records for the Village indicated a daily pumping average of 0.84 mgd with a maximum day of 1.62 mgd. The existing water distribution system operates as two independent systems: the South Distribution System and the Tall Oaks Distribution System. Table 3-2 displays the current infrastructure associated with the entire existing municipal water system.

GRANDWOOD PARK

Grandwood Park is an unincorporated area located in Warren Township in north central Lake County. The LCDPW provides water service to Grandwood Park. Grandwood Park's population reached 6,382 in 2005 as the community continued to expand its water distribution system. The 2005 water use records for Grandwood Park indicated a daily pumping average of 0.49 mgd and a maximum day of 0.90 mgd. Table 3-3 on the following page displays the current infrastructure associated with Grandwood Park's water distribution system.

The 2030 population estimate of 11,146 is from the *Grandwood Park Water System Water Supply Study Update*, prepared by Rezek, Henry, Meisenheimer and Gende, Inc. in March 2006. The study indicates additional commercial and residential growth. This population forecast results in a future average water demand of 0.86 mgd.

The study suggests that the continued growth of the Grandwood Park water distribution system will require two deep sandstone aquifer wells with the minimum capacity of 1,350 gpm, an ion exchange softening treatment system for radium removal, and a 400,000 gallon elevated storage tank.

TABLE 3-3
Grandwood Park
Water System Overview

Wells	**Capacity (gpm)**
Shallow Wells	
1	126
2	97
3	236
4	249
6	66
8	180
9	282
Deep Wells	
7	136
Total Pumping Capacity	**1,372 gpm**
Reservoirs	
Ground Storage Tank	250,000 gal
Ground Storage Tank	200,000 gal
Elevated Storage Tank	75,000 gal
Total Storage Capacity	**525,000 gal**

LAKE VILLA

The Village of Lake Villa is located in northwest Lake County and was incorporated in 1901. The Village served as a resort area for the affluent. In fact, several mansions built during the period are still standing and are a rich part of the community's history.

The Village of Lake Villa's population reached 8,500 in 2005 as the community continued its residential expansion. The 2005 water use records for the Village indicate a daily pumping average of 0.72 mgd with a maximum day of 1.92 mgd. Table 3-4 below, displays the current infrastructure associated with the Village's municipal water system.

TABLE 3-4
Village of Lake Villa
Water System Overview

Wells	**Capacity (gpm)**
Shallow Wells	
5	215
6	165
7	290
8	265
9	290
11	330
15	235
Deep Wells	
13	245
14	290
Total Pumping Capacity	**2,325 gpm**
Reservoirs	
Elevated Storage Tank	400,000 gal
Elevated Storage Tank	200,000 gal
Ground Storage Tank	1,000,000 gal
Total Storage Capacity	**1,600,000 gal**

The Village of Lake Villa recently improved its system capacity with the installation of a 1.0 million gallon ground storage tank and a new deep well. The current distribution system operates as two independent systems: the North Distribution System and the South Distribution System.

The CMAP 2030 population forecast for Lake Villa is 16,546; however, the Village believes that this number does not accurately portray anticipated growth. The most recent population estimates, prepared by Applied Technologies, indicate a 2030 population for Lake Villa of 18,519. This population estimate results in a future average water demand of 1.57 mgd. This demand accounts for anticipated growth in residential and industrial water demand.

LINDENHURST

The community of Lindenhurst was founded in 1956 from the Ernst E. Lehmann farm and named for two rows of Linden trees that surrounded the original farm. The initial growth of the community was characterized by private well and septic systems with rural street cross sections.

Over the last thirty years, the Village of Lindenhurst has experienced steady residential and commercial growth that has converted the rural character of the community to that of a suburban character. In 2005 the Village of Lindenhurst reached a population of 14,348. The 2005 water use records for the Village indicate a daily pumping average of 1.20 mgd with a maximum day of 2.80 mgd. Table 3-5 on the following page displays the current infrastructure associated with the Village's municipal water system.

The CMAP 2030 population forecast for Lindenhurst is 19,843. This population results in a future average water demand of 1.67 mgd.

The most recent water system study, prepared by Strand Associates, Inc, indicates that the continued growth of Lindenhurst will require 1,200 gpm additional pumping capacity and 400,000 gallons of storage. This would result in the construction of one deep well or up to three shallow wells, a ground storage tank, a booster pump station, and the associated transmission main improvements.

TABLE 3-5
Village of Lindenhurst
Water System Overview

Wells	**Capacity (gpm)**
Shallow Wells	
1	100
2	320
3	185
4	225
5	215
6	440
7	270
8	100
9	480
10	500
Total Pumping Capacity	**2,835 gpm**
Reservoirs	
Elevated Storage Tank	750,000 gal
Elevated Storage Tank	500,000 gal
Total Storage Capacity	**1,250,000 gal**

NORTHWEST REGION

Petite Lake, Fox Lake Hills, and Stanton Bay are subdivisions located in unincorporated areas. They receive water service from LCDPW and are collectively referred to as the Northwest Region. The Region presently includes 983 customers, with a population of 2,950. The current water usage is 0.13 mgd. For purposes of this study, these subdivisions are considered to be completely built out. Future water demand will be estimated to remain the same as present day water demand.

OLD MILL CREEK

The Village of Old Mill Creek includes a large land area located along the west side of Interstate 94; however, it is a generally undeveloped area. The present population of 251 is served by private wells. This area is expected to grow to a projected 2030 population of 5,237. Future average water demand is projected to be 0.45 mgd.

WAUCONDA

The Village of Wauconda is located in southwest Lake County and was incorporated in 1877. Wauconda's early growth is attributed to McHenry Road, a stage coach road connecting Chicago to Janesville, Wisconsin. Surrounded by farm country and forest preserves, Wauconda currently strives to maintain its small town character with the pressing demands of industrial, commercial and residential growth.

The Village of Wauconda's population reached 13,211 in 2005 and the water use records for that year indicate a daily pumping average of 1.28 mgd with a maximum day of 2.19 mgd. The Village meets current water demand with four deep wells, three shallow wells, and four elevated storage tanks. Table 3-6 on the following page displays the current infrastructure associated with the Village's municipal water system.

TABLE 3-6
Village of Wauconda
Water System Overview

Wells	**Capacity (gpm)**
Shallow Wells	
3	300
5	480
6	475
Deep Wells	
4	600
7	550
8	350
9	400
Total Pumping Capacity	**3,155 gpm**
Reservoirs	
Elevated Storage Tank	500,000 gal
Elevated Storage Tank	500,000 gal
Elevated Storage Tank	500,000 gal
Elevated Storage Tank	500,000 gal
Total Storage Capacity	**2,000,000 gal**

The CMAP 2030 population forecast for Wauconda, Illinois is 25,653, which results in a future average water demand of 2.49 mgd.

SECTION 4
POPULATION AND WATER DEMAND

Each of the Planning Group's member communities met with the study engineers to discuss subjects such as the present water systems, water usage, and population data. The discussions also included population projections for the year 2030 and water demand projections. Water data used in the study was obtained from community water utility records. Population data and projections are based on data from the Chicago Metropolitan Area Planning Agency (CMAP). The population estimates and projections were occasionally modified to reflect known local developments.

CURRENT SITUATION

Table 4-1 presents water data from each of the communities. Average daily water demand is the total water pumped by the community wells for the year 2005, divided by 365 days in a year. The average daily water demand is the water usage in the community for a "typical" day during 2005. The maximum day water demand is the largest amount of water pumped by the community water system, usually in the summer months, on any one day during the year 2005. The maximum to average day ratio is simply the maximum day divided by the average day, and provides a numeric value for the variability in water demand for that community. A typical maximum to average day ratio is 2.0. The overall average value for the communities is 2.05, which is very close to the typical value. The total water demand for 2005 for the communities is 6.10 million gallons per day (mgd) for the average day and 12.49 mgd for the maximum day demand

It should be noted that the maximum day demands for all of the communities may not fall on the same day, due to many factors. Therefore, a lower ratio will be used to determine future maximum day demands as discussed later.

TABLE 4-1
Present Water Demand
Year 2005

Communities	Daily Average Water Demand (mgd)	Maximum Day Water Demand (mgd)	Maximum to Average Day Ratio
Antioch	1.44	2.80	1.94
Fox Lake	0.84	1.62	1.93
Grandwood Park	0.49	0.90	1.84
Lake Villa	0.72	1.92	2.67
Lindenhurst	1.20	2.80	2.33
Northwest Region	0.13	0.26	2.0
Old Mill Creek	-	-	-
Wauconda	1.28	2.19	1.71
Total	**6.10**	**12.49**	
Average			**2.05**

Table 4-2 on the following page provides the present population estimate for each community, as well as the water demand for each community on a per-capita or per-person basis. The per capita water demand for typical communities is in the range of 70 to 85 gallons per-capita per day (gpcd). Communities with higher water demands usually have commercial or industrial water customers that affect the average per-capita water demand values. A typical value for per capita water demand in communities with residential, commercial, industrial, and institutional water customers is 100 gpcd. The average per-capita water demand for all of the Planning Group communities is 92 gpcd, which is in the range of typical values.

TABLE 4-2
Present Population and Per Capita Water Demand
Year 2005

Communities	Population	Daily Average Water Demand (mgd)	Average Per Capita Water Demand (gpcd)
Antioch	13,800	1.44	104
Fox Lake	7,000*	0.84	120
Grandwood Park	6,382	0.49	77
Lake Villa	8,500	0.72	85
Lindenhurst	14,348	1.20	84
Northwest Region	2,950	0.13	44
Old Mill Creek	251	-	-
Wauconda	13,211	1.28	97
Total	**66,442**	**6.10**	
Average			**92**

* Fox Lake's population reached 10,700 in 2005, but only 7,000 are currently utilizing municipal water.

FUTURE SITUATION

Water systems cannot be designed for only the present, known water demands. Given the fact that all of the communities are currently experiencing population growth, any system designed for only the known demands would be undersized as soon as construction was complete. The challenge is identifying a reasonable future design date and estimating total water usage for that date.

Typical municipal water industry practice is to look forward twenty years. For this study, the year 2030 was initially selected. The year 2030 is approximately fifteen years from the earliest date that a new water system could begin operation, and 2030 coincides with a planning year for which population estimates are available from CMAP.

Existing data is combined with future population estimates to project future water demand. Table 4-3 presents the population forecasts and future per-capita water demand for each community. The study has assumed that the present per-capita water demand is

a reasonable estimate of the future per-capita water demand. Future water demand is then calculated by multiplying the future population by the per-capita demand.

TABLE 4-3
Future Population and Average Water Demand
Year 2030

Communities	Population	Average Per Capita Water Demand (gpcd)	Daily Average Water Demand (mgd)
Antioch	30,594	104	3.18
Fox Lake	12,589	120	1.51
Grandwood Park	11,146	77	0.86
Lake Villa	18,519	85	1.57
Lindenhurst	19,843	84	1.67
Northwest Region	2,950	44	0.13
Old Mill Creek	5,237	85	0.45
Wauconda	25,653	97	2.49
Total	**126,531**		**11.86**
Average		**94**	

Table 4-4 presents maximum projected water demands for the communities. It should be noted that during the course of this study, a variety of "maximum to average day" ratios were considered. These ratios have a substantial effect on the physical design characteristics of the water system. Treatment system capacity and pipeline size are both designed for the maximum day flows. While it is necessary to accommodate fluctuation in water demand, it is also reasonable to manage maximum day demands to avoid the need for treatment and pipeline capacities that may only be used once each year.

First, the existing values from each community were used. Then it appeared somewhat unfair that some communities would have very large peaking ratios while others were much lower, so a uniform ratio of 2.0 was employed. However, ratios of 2.0 and greater were resulting in larger water pipelines that were both more expensive and not fully utilized most of the time. A value of 1.75 was selected as a "reasonable" maximum to

average day ratio, which allows for some high flow periods but reduced the size of the water mains, pumps, and treatment systems. For comparison purposes, some other water groups utilize maximum day to average day ratios as low as 1.5.

The last column in Table 4-4 is the Maximum Water Demand, which is determined by multiplying the average demand by the maximum day to average day ratio.

TABLE 4-4
Future Water Demand
Year 2030

Communities	Daily Average Water Demand (mgd)	Maximum to Average Day Ratio	Maximum Day Water Demand (mgd)
Antioch	3.18	1.75	5.57
Fox Lake	1.51	1.75	2.64
Grandwood Park	0.86	1.75	1.50
Lake Villa	1.57	1.75	2.75
Lindenhurst	1.67	1.75	2.92
Northwest Region	0.13	1.75	0.23
Old Mill Creek	0.45	1.75	0.79
Wauconda	2.49	1.75	4.36
Total	**11.86**		**20.76**

The total daily average water demand for the year 2030 is calculated to be 11.86 mgd. The total maximum day water demand is calculated to be 20.76 mgd. These are the design values that will be used in later sections of this report to determine water treatment plant capacity and pipeline size, which are then used to prepare system cost estimates.

Table 4-5 on the following page summarizes the population and flow values developed in this section. In addition, it presents population and flow data for the year 2041 for coordination with the financial analysis time table.

Thirty years was determined by the financial consultants to be the best financing scenario. Logically, the bond financing should match the water usage figures. Since this time frame extended beyond the project population and water demand figures, additional years were calculated based on the lowered growth rate of 1% per year beyond the year

2030. This compares with the 3% growth rate assumed up until 2030. Please refer to Table 4-5 for the extended year forecasts.

TABLE 4-5
Population and Water Demand Projections

Year	Population	Daily Average Water Demand (mgd)	Maximum Day Water Demand (mgd)
2005	66,442	6.10	12.93
2030	126,531	11.86	20.76
2041	141,167*	13.23	23.15

*The population and water demand growth estimates were based on a lowered growth rate of 1% per annum between the years 2030 and 2041.

SECTION 5
WATER QUALITY AND QUANTITY

LAKE COUNTY SOURCES OF WATER

Ground Water

Two dominant sources of water are utilized in Lake County: ground water and Lake Michigan water. Local wells have traditionally been the most common water source throughout western, and more particularly northern and northwestern, Lake County. In the past, the cost to add capacity to a municipal water system by drilling a well was relatively inexpensive. Well water is typically considered naturally pure, requiring only chlorine addition to maintain bacterial quality throughout the distribution system, although other treatment chemicals may be necessary. Much of the information below is taken from the recent *2004 Lake County Regional Framework Plan*.

The availability of inexpensive ground water sources has been changing due in part to substantial existing and potential growth in the northern Lake County area. Ground water quantity is not unlimited. Water enters and leaves the ground water aquifers through natural processes. Withdrawing water from the aquifers using wells has minimal impact on the natural system as long as the rate of water withdrawal from the aquifer is significantly less than the rate of natural recharge. Changes in the ground water elevation are observed when the rate of water withdrawal approaches and/or exceeds the recharge rate. This is referred to as "mining." The first impact of withdrawing excessive amounts of ground water is the lowering of the ground water level, which requires lowering the well pumps and drilling deeper wells, subject to the limits of the given aquifer.

Lake County wells are generally classified as shallow or deep. Shallow wells extend into the sand and gravel aquifer, to a depth of up to 749 feet. Typical depths are 200 to 400 feet. Shallow wells take water from the shallow sand and gravel and bedrock aquifer system. Deep wells extend down to the sandstone aquifer, from 750 feet to 1,549 feet. These wells extend into the deep bedrock aquifer system. Wells deeper than 1,550 feet extend into the Elmhurst-Mt. Simon aquifer.

Shallow wells are generally less expensive to develop and operate. However, shallow wells are more sensitive to ground water level draw down due to over pumping and reduced recharge rates during droughts. Deep wells are generally considered more reliable than shallow wells because they are more productive and less susceptible to recharge issues. Deep wells cost more to develop due to the greater drilling depths and

higher head/more expensive pumps. Deep wells also cost more to operate due to the larger motors resulting in greater power requirements for the deep well pumps.

The quantity of water available from the Lake County ground water resources has not been firmly established. It is not known at this time if the well water supply is adequate to support the projected population. It is clear that additional deep wells may be needed for some communities, and this trend has already begun.

The deep bedrock aquifers are replenished from areas in Boone, McHenry, De Kalb and Kane counties. The practical sustained yield from the deep bedrock aquifers for northeastern Illinois is estimated to be 46 to 65 mgd. Actual withdrawals for the same area were estimated to be 72 mgd in 1999, and increasing. Thus, withdrawals are probably exceeding replenishment, which is referred to as "mining" the aquifer. The deep bedrock aquifers are not a reliable source of water for the long term, as long as mining continues. Continued development of deep wells is a costly proposition with an uncertain future. Developing a deep well with equipment is approaching an estimated $1 million per well. Adding treatment to that well is estimated to add another $1.2 million, for a total in excess of $2 million. Development of a shallow well is less costly, but with treatment is still approaching $2 million.

Shallow aquifers are recharged by local rainfall and snowmelt. The actual recharge rate in Lake County is unknown, though it has been estimated to be as high as 61.3 mgd. The withdrawal rate was estimated to be 8 mgd in 2003 and is forecasted to increase to 32 mgd in 2020. While these values appear promising, they must be tempered with two considerations. First, additional development will increase the impervious surface area, which will reduce the infiltration of surface water to the aquifers. Second, the quantity of water available is directly related to precipitation, and droughts will reduce the quantity of water available during the drought period. Another factor is the location of the wells, as they tend to be clustered in areas closest to the need rather than systematically spread out. This can cause interference between wells developed by several communities, especially neighboring communities.

The Illinois State Water Survey, in cooperation with the Illinois State Geological Survey, is preparing a ground water model of the Fox River Basin shallow aquifers. When complete, this study will provide additional insight into the shallow aquifers in western Lake County. Study completion is projected to be at least a year away. Discussions with the Illinois State Water Survey confirm that little firm data is available at this time as to

the status of the shallow aquifers. In addition, they are concerned about quantity and water quality with the continued development of deep wells.

Well water quality and treatment is becoming more of an issue. All well water is typically hard. In this region, treatment to soften water is traditionally an individual customer issue, not a community issue. Shallow well water is often high in iron which may require treatment at the community level. Shallow wells are also subject to contamination from surface pollutants, including microbial contaminants, volatile organic chemicals, nitrates, and others. Deep well water can have radium concentrations high enough to require community treatment systems. Typically, disinfection is required to protect the bacterial quality of the water, and fluoride is usually added as a public health measure. More on water quality and treatment will be discussed below.

Iron concentrations are typically high in shallow wells. Although naturally occurring iron is not a public health issue, it is an aesthetic issue. Above a certain limit (0.3 mg/l), iron can stain clothes, plumbing fixtures, etc. Some communities utilize "sequestering" chemicals to keep the iron in solution to avoid this issue, but results are mixed at best. Individual treatment for iron removal is also accomplished by some homeowners.

Typically, home treatment is expensive when compared to a centrally located treatment facility, by virtue of economies of scale. Operational results will tend to be more consistent in a central facility than in a home. Costs for home treatment are usually minimized or left out in any analysis, but they need to be considered in the overall costs to provide a water supply.

Ground Water Softening/Treatment

Water hardness is composed of minerals dissolved in water, principally calcium, plus magnesium and manganese. These minerals interfere with the action of soaps, such as laundry soaps, bath soaps, and other cleaning products. These minerals also form deposits on plumbing fixtures, clog pipelines, and reduce the life of water heaters. Water softening is typically considered to be a customer issue, although some communities provide central softening plants.

Hardness minerals can be removed from raw water using several different softening processes. The only practical process that can be employed on a homeowner level is an ion exchange process. In this softening process, sodium ions are exchanged for calcium and other hardness elements. The sodium ions do not interfere with soaps and do not form deposits on plumbing fixtures, pipes and water heaters. The softener exchange

column becomes exhausted after enough water has passed through the system. The exchange column is regenerated by treating it with a highly concentrated salt (brine) solution, which flushes the hardness ions out of the column and replenishes the sodium ion supply. The used brine solution is flushed down the sewer.

Homeowner water softeners are not difficult to operate, but must be maintained. The newer units do not require maintenance other than adding salt to the brine tank. The salt is typically available in 40 and 80 pound bags, and about 160 pounds is added at one time. Depending on the water hardness, the amount of water usage, and the quality of the softening equipment, salt additions are necessary in one to three month intervals. The equipment has an expected life of approximately 10 years.

Elevated levels of iron in water supplies can interfere with the ion exchange system in a typical softener. Waters with high levels of iron may need to be pretreated with an iron removal filter prior to softening.

Hard waters have anions associated with the hardness ions. Chloride is a common anion that does not cause any problems. However, hard waters sometimes have sulfide anions that are not removed by any homeowner level of treatment equipment. The sulfides can create sulfur odor problems, particularly in hot water.

Home treatment units are not without cost. Included are the costs of the softened unit itself, plumbing work, and the cost of the salt. These costs are somewhat variable by household and could be eliminated with the introduction of Lake Michigan water.

Lake Michigan Water

Lake Michigan is a huge reservoir of high quality surface water. It is used as a water supply by communities along its shoreline in Illinois, Indiana, Michigan, and Wisconsin. Despite newspaper accounts of environmental issues, Lake Michigan is considered to be a reliable source of high quality water and is a source of envy in other parts of the country. In Illinois, Lake Michigan is used as a water supply by Chicago, most of Cook County and Du Page County, part of Lake County, part of Will County, and many other Chicago area communities.

Lake Michigan, like any surface water, can potentially be contaminated by a large number of pollutants. Issues including improperly treated wastewater from other states have been raised in the past. Air pollutants can be carried into the water by rainfall. Surface waters entering the lake carry contaminants from urban runoff and contaminants

from agricultural land uses. Continued vigilance to protect the lake water quality is necessary and ongoing. In the recent past, "conventional" water treatment was considered adequate to prepare Lake Michigan water for potable water supply.

Lake Michigan water treatment is generally composed of screening to remove debris, chemical addition, flocculation and settling and filtration to remove fine solids, fluoride addition, and disinfection. In recent years, membrane treatment systems have been employed in newer treatment facilities to replace the settling and filtration systems. Membrane technology can produce high quality water at less cost than a new conventional water treatment plant. Membrane technology currently has widespread use, especially on high quality source waters such as Lake Michigan. Lake Michigan water is considered moderately hard in that it has a lower level of hardness compared to well water. Individual homeowner softening may not be necessary for lake water and is not typically done after lake water is received.

Water that is withdrawn by Illinois communities from Lake Michigan and not returned is limited by the Illinois Department of Natural Resources. Illinois has a total allocation of Lake Michigan water of 3,200 cubic feet per second, or approximately 2.1 billion gallons per day for all users. Refer to Section 8 of this report for additional information on allocations.

RELATIONSHIP TO PROPERTY VALUES

Well water often creates many issues that homeowners need to address. The aforementioned softener typically solves most of the problems. However, the softener is another piece of equipment that needs to be maintained and occasionally replaced. Well waters can also have iron problems and sulfur odors.

Lake Michigan water, on the other hand, has none of the perceived well water issues. It is generally regarded as high quality water lacking many of the supply issues of other sources.

Lake Michigan water supply is often viewed as a positive factor for a property owner. It is not unusual for a real estate advertisement to state that the property has "Lake Michigan water." Thus, changing a community water supply to Lake Michigan water has the potential to add value to the homes in the community.

SECTION 6
LAKE MICHIGAN WATER SUPPLY

As part of this feasibility study to convey treated Lake Michigan water to member communities, the Planning Group looked to the east for a viable source. The closest water treatment facility (WTF) to the study area is the Lake County Public Water District (LCPWD) plant in Zion, Illinois. It is located on 17th Street, east of Sheridan Road and adjacent to the Illinois Beach State Park. The District currently serves both Zion and Winthrop Harbor, as well as the Illinois Beach State Park. Furthermore, LCPWD has expressed a willingness to discuss assisting the Planning Group in potentially providing a Lake Michigan water supply.

In order to determine if the LCPWD is able to accomplish this objective, a meeting was held in September 2006 to discuss the parameters for such a project. Generally speaking, the LCPWD facilities are adequate to supply water to their existing customers, but do not have the capacity necessary to serve the Planning Group's water needs. However, the LCPWD facilities and site provide excellent access to Lake Michigan, and there is room on the site for additional water treatment facilities. It was generally concluded that the LCPWD site is the preferred location for Lake Michigan water supply facilities for the Planning Group.

LAKE COUNTY PUBLIC WATER DISTRICT FACILITIES

The LCPWD water treatment facility presently has a capacity of 6 million gallons per day (mgd). At the current time, the average day production is approximately 3 mgd. When allowing for a maximum day to average ratio of approximately 2, all of the present capacity production is allocated. LCPWD is currently planning to add additional settling basin capacity, which should bring the overall capacity of the water treatment facility to approximately 8 mgd. At both its current and forecasted capacities, the water plant has insufficient capacity to provide adequate service to the Planning Group. Consequently, additional treatment capacity will need to be constructed.

The current plant is a conventional settling/filtration facility commonly found on Lake Michigan utilizing typical treatment chemicals for a plant of this type. The plant was constructed in 1963 and has served its customers well. It meets all applicable regulatory

standards. A more detailed description of the facilities is outlined in the following paragraphs.

Due to the potential for serving additional outside customers, LCPWD entered into a one-year pilot program in 2003 to study possible expansion scenarios. The pilot program focused on the use of membrane technology, specifically the use of submerged membranes, in lieu of expanding the conventional facilities. The results of that study were encouraging. It is contemplated that any new treatment facilities for the Planning Group will utilize this emerging technology.

Listed below are the major components that comprise the LCPWD facilities at the lakefront. Each of these components will be analyzed for their applicability to the proposed Planning Group needs.

Raw Water Intake

The raw water intake line is prestressed concrete cylinder pipe, 42-inches in diameter, that extends into Lake Michigan approximately 3,000 lineal feet. It has two (2) intake cones at the far end of the pipeline, only one of which is being utilized at this time. The intake line is buried in the lake bottom and feeds raw water to the low lift station by gravity. The average depth of the water level over the intake cones is approximately 25 feet. The existing intake pipeline is reportedly in good condition. Typically, these types of pipe have a service life of 75 to 100 years, such that replacement will not be necessary in the foreseeable future.

Hydraulic calculations performed for this study by Applied Technologies determined that the 42-inch diameter intake line capacity is approximately 30 to 35 mgd based on an assumed condition and coefficient of friction factors. Utilizing the projected Planning Group and LCPWD requirements, this capacity should be sufficient for the foreseeable future. The need or timing for an additional raw water intake line will be determined by how fast the projected growth occurs and if the projections are accurate. If this project proceeds to design, actual flow tests should be undertaken to verify the condition and capacity of the raw water intake line to verify the assumptions.

Raw Water Low Lift Pump Station

The raw water intake line delivers water to a wet well in the low lift pump station at the lakefront. The water is screened and then pumped out of the wet well via three vertical turbine pumps. The raw water is pumped through a 20-inch diameter pipeline to the water

treatment plant approximately 3,000 feet away. The low lift pumps have a combined capacity of 9 mgd, or a reliable capacity of 6 mgd with one unit out of service.

At the present time, the raw water low lift pump station has adequate capacity for the LCPWD requirements, but does not possess capacity for the projected flows for the Planning Group. The three pumps could be replaced with larger pumps, but there are size limitations within the structure that would likely make this option unfeasible. Consequently, it is assumed that a new raw water lift station with separate pumps will be required, dedicated to the Planning Group requirements. This new lift station will be connected to the existing raw water intake line at the lakefront.

Raw Water Transmission Line

Currently, there is a 20-inch diameter raw water transmission main that connects the raw water lift station to the water treatment plant. This main is satisfactory for the LCPWD requirements, but is insufficient for the water demands of the Planning Group. Therefore, a new transmission main will need to be constructed. Initial calculations suggest that this main should be 36-inches in diameter and approximately 3,000 feet in length.

Water Treatment Plant

The LCPWD water treatment plant, as described above, does not possess the treatment capacity necessary to serve both current and future Planning Group requirements. Consequently, it has been assumed that new treatment units would be constructed on the LCPWD plant site. The LCPWD has sufficient property available for both current and future needs. Therefore, it is assumed that an initial water treatment capacity of 15 mgd would be constructed near the existing water treatment facilities. This initial capacity should be adequate for several years of operation.

The technology to be utilized would be submerged membrane technology already pilot tested by the District. This technology is gaining much favor, especially on the Great Lakes, due to its high degree of treatment and relatively lower cost. Membrane treatment plants can typically be constructed for less than a third of a conventional water treatment plant. Communities utilizing membrane technology on Lake Michigan include Lake Forest, Illinois, and Kenosha, Manitowoc, Two Rivers, and Racine, Wisconsin. Many more are using or considering this technology. The building for the membrane and its associated equipment, piping, pumping, chemical storage, controls, etc. would be a typical slab type construction rectangular structure. Space would be provided in the building for future expansion.

On Site Storage

The existing LCPWD water plant site has a 1 million gallon ground storage tank that serves as both emergency and operational storage and conveys treated water to the existing high service pumps. It allows the plant to operate on a somewhat constant flow basis with the storage acting as a "buffer" between the treatment plant and high service pumps. It also serves as emergency storage in the event that the water treatment plant shuts down due to an emergency, allowing the high service pumps to continue pumping for a period of time until the plant is up and running again. It is assumed that separate additional storage will be necessary on the plant site, dedicated to the Planning Group facilities. For the purposes of this study, it is assumed that a 3 million gallon ground storage tank will be constructed.

High Service Pumping

The existing high service pumping units were designed to serve the existing water systems. The flow and pressure requirements for the Planning Group water system will be substantially greater than the requirements for the LCPWD. Consequently, the existing high service pumps are inadequate to convey the water to the Planning Group facilities. It is assumed, therefore, that a separate high service pumping facility will be required. The high service pumps will be designed to convey the maximum demand with the largest pump out of service.

Water Transmission/Distribution Mains

The current LCPWD water conveyance system is primarily comprised of smaller water distribution mains (mostly owned by the City of Zion). These water mains have insufficient capacity to serve the needs of the Planning Group. This, coupled with the great distance to be covered and the rise in elevation to the west, dictate that higher pressures are necessary than those which are acceptable to LCPWD customers. Hence, it has been assumed that a separate 36-inch diameter water transmission main would be constructed from the high service pumps to a booster pumping station and 3 mg reservoir, located near the intersection of Route 45 and Miller Road near Old Mill Creek.

PROPOSED FACILITIES

During the course of the discussions and analysis, and as summarized above, it became obvious that most of the current water treatment plant components do not have the capacity to handle the projected water demands of the Planning Group. Rather, the LCPWD site would be used as the vehicle to expand the plant in a fashion so as to not duplicate any existing facilities that can be utilized for both groups. An example of this is the use of the existing intake, which appears to have sufficient capacity for the foreseeable future. Another example is the availability of property to construct the necessary facilities. If the Planning Group were to look for property near Lake Michigan, it would likely be very costly, if even available. The Group would negotiate with the LCPWD to allow usage of the raw water intake line and plant site for their facilities. For planning purposes, it is assumed that a 15 mgd facility would be constructed initially, with the ability to expand to 21 mgd for the year 2030 water demands.

Consequently, the Planning Group plan would encompass the addition of submerged membrane technology (as piloted by LCPWD) adjacent to the existing plant. The proposed plant would essentially be a "stand alone" facility, although it may be logical for the parties to discuss interconnections such that in emergencies either water purveyor could assist the other. Figure 6-1 illustrates how the proposed facilities could be located on the site.

The existing intake line would be utilized, but a new 36-inch diameter raw water transmission main from the lakefront to the new WTP would be necessary. In addition, a low lift pump station connected to the existing raw water intake would need to be constructed to accommodate the increased flows. A 3.0 mg ground storage tank would be constructed on the WTP site to serve as both emergency storage, operational storage, and finished water feed for the new high service pumps.

As discussed above, new water treatment facilities would be installed at the plant in a separate structure, including the necessary membrane units and high service pumps. Finally, a water transmission main would be installed from the WTP to the communities, ultimately to their designated connection points. In essence, the proposed facilities for the Planning Group at the LCPWD location would utilize only the existing intake line. From that point on, the proposed facilities would be virtually "stand alone."

To convey treated water to its customers, a system of water transmission mains would begin at the water plant and generally proceed west along Route 173 (except in Zion) to Route 45, south to Miller Road where there would be a booster pump station and a 3.0

O:\4000 to 4499\4060\GRAPHICS\DRAWINGS\FIGURE 6-1.dwg

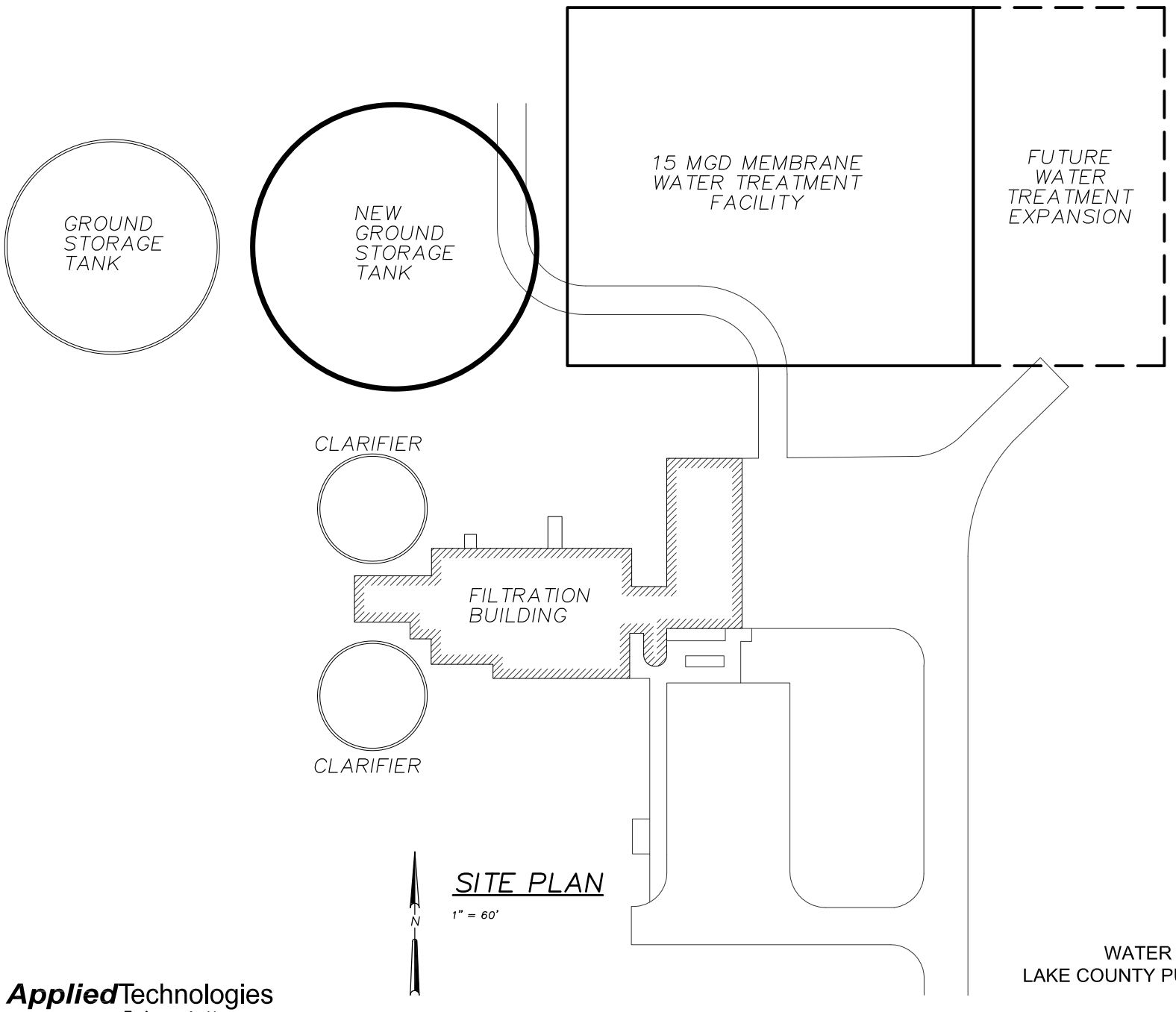

FIGURE 6-1
WATER TREATMENT SITE PLAN
LAKE COUNTY PUBLIC WATER DISTRICT
Lake County, Illinois

Applied Technologies
Engineers - Architects

mg ground storage reservoir. This booster pump station would also have the capability to add additional chlorine as necessary to maintain chlorine residual throughout the water delivery system. Storage and office space would be provided. It is assumed that the main office and control room would be located at the water treatment plant with a satellite office at the booster pump station.

The booster pumps would be configured to deliver treated water to two legs of the pipeline network. Figure 6-2 shows a schematic layout of the piping system and the locations of various facilities, including connection points to each of the communities. For the purposes of this study, it is anticipated that each community would have two connection points to the water transmission system, with the exception of Old Mill Creek and the County's Grandwood Park system, which would have one each. In the vicinity of the southern leg of the piping system, it is anticipated that an additional booster pumping station and reservoir would be required to convey water to Fox Lake and Wauconda.

At the connection points, water would be delivered to the member communities' ground storage reservoirs. A metering vault with control valves would both meter and control the flows to each connection point. Preliminary discussions have determined that the system should be sized to accommodate a maximum day demand based on the projected average day demand times 1.75, as established in Section 4 of this report. For the record, if the maximum day demand can be reduced, then the major components of the proposed system can also be reduced. As it is, any fluctuations in demand above the maximum day, such as diurnal flows during a day, will need to be handled by the community's system. It should be noted that the member communities will likely need to construct internal improvements to accept Lake Michigan water. Figure 6-3 presents a schematic of the proposed water treatment plant, reservoirs, and booster pumping stations.

COST EVALUATION

Capital costs were estimated for the proposed water system. The costs include the water treatment plant, 45 miles of pipe ranging in size from 10- to 36-inches, storage reservoirs, and booster pump stations. Construction cost estimates were based upon recent project experience for similar projects, as well as by contacting major pipeline contractors for current cost per foot of various size pipelines. In addition, other factors are included, such as contingencies, engineering, land acquisition, right-of-way costs, easement costs, etc. These costs are based on current year 2007 costs. The capital cost estimate is presented on Table 6-1 and additional cost details are presented in Appendix A.

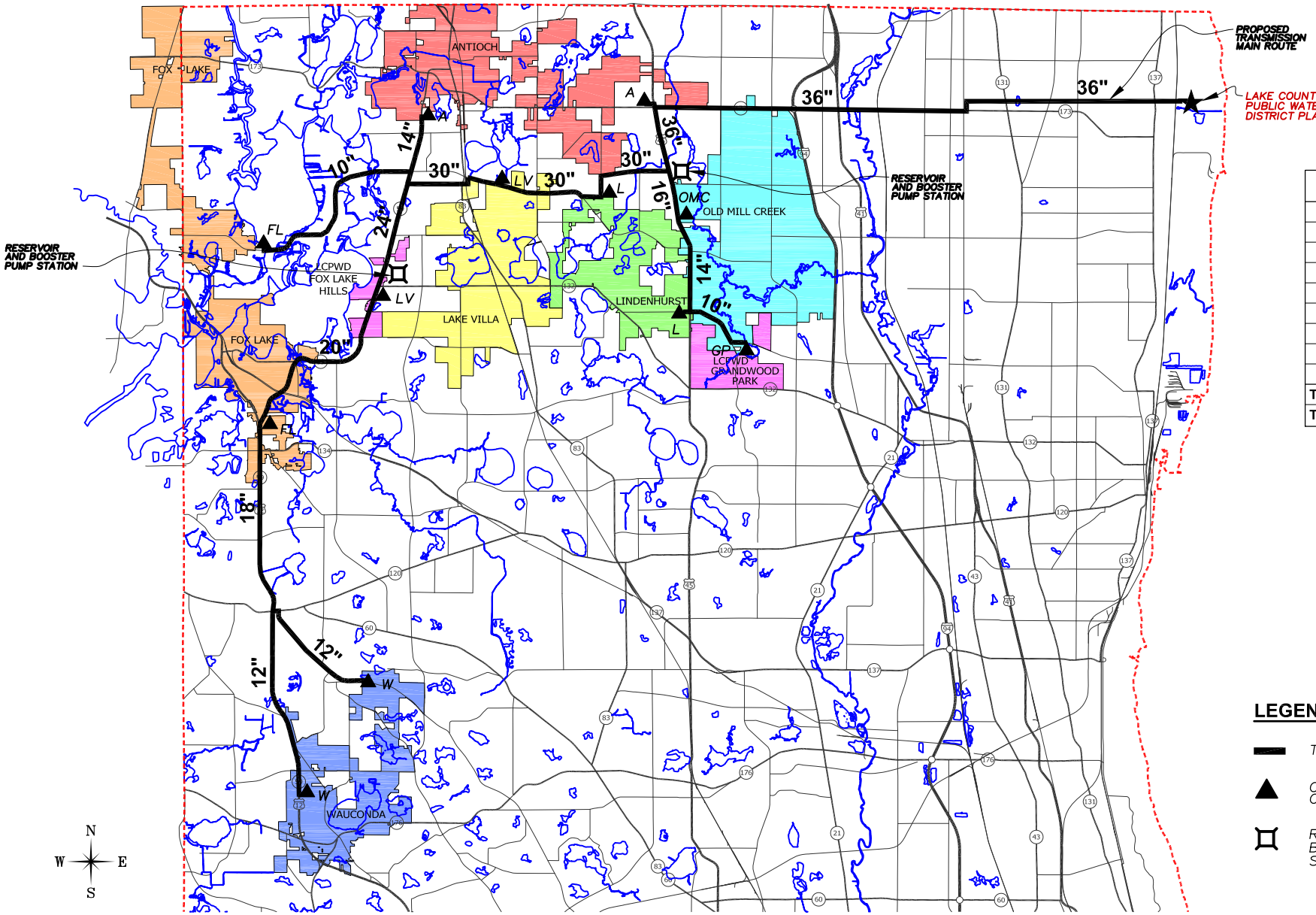

PIPE (INCHES)	LENGTH (FEET)
36	71,000
30	31,000
24	12,000
20	21,000
18	20,000
16	7,000
14	13,000
12	34,000
10	29,000
TOTAL (FEET)	238,000
TOTAL (MILES)	45

LEGEND

- TRANSMISSION MAIN ROUTE
- COMMUNITY CONNECTION POINTS
- RESERVOIR BOOSTER PUMP STATION

AppliedTechnologies
Engineers-Architects

0 5 10,000 15 20,000
SCALE: 1" = 10,000'

FIGURE 6-2
SYSTEM MAP
LAKE MICHIGAN WATER FEASIBILITY STUDY
Lake County, Illinois

G:\4000 to 4499\4060\GRAPHICS\DRAWINGS\FIGURE 6-2.dwg

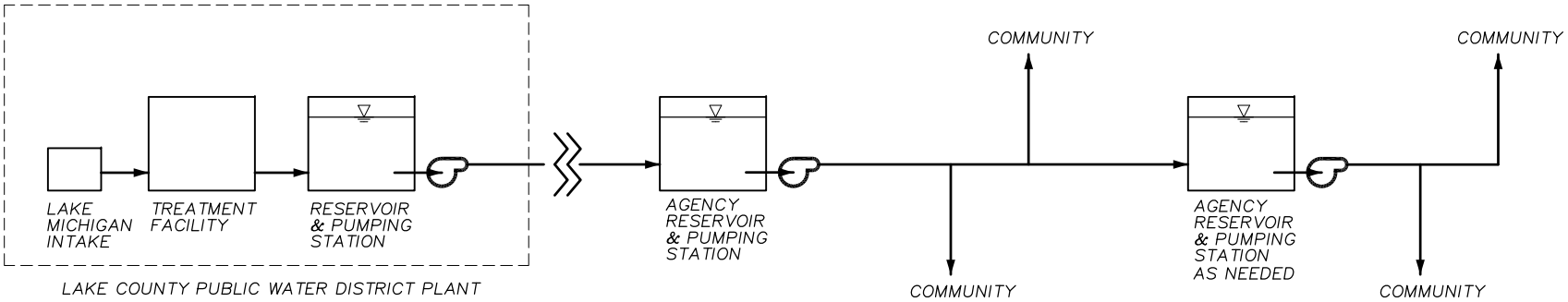

SYSTEM OVERVIEW

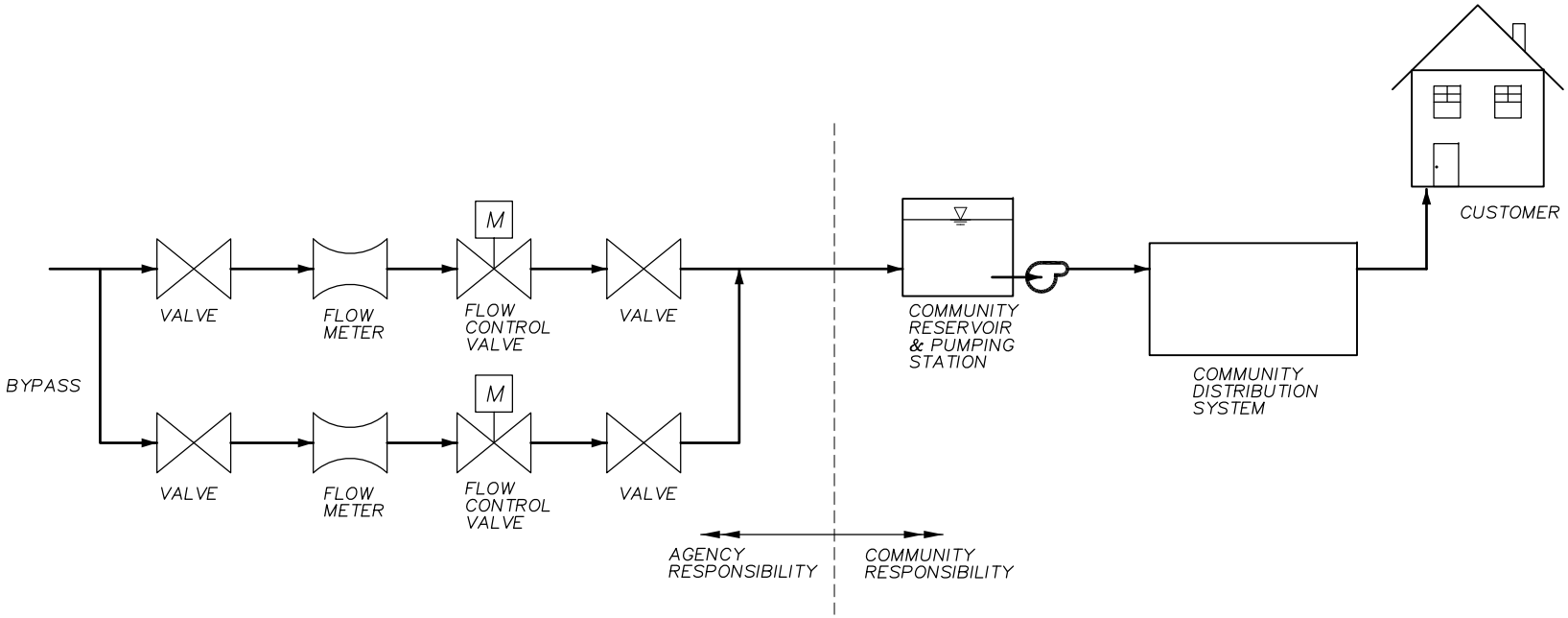

COMMUNITY CONNECTION POINT

FIGURE 6-3
SYSTEM SCHEMATIC
LAKE MICHIGAN WATER FEASIBILITY STUDY
LAKE COUNTY, ILLINOIS

AppliedTechnologies
Engineers-Architects

Q:\4000 to 4499\4060\GRAPHICS\DRAWINGS\FIGURE 6-3.dwg

TABLE 6-1
TOTAL ESTIMATED PROJECT COST
AUGUST 2007

ITEM	COST
Pipeline System From Plant to Customers	
238,000 of Water Transmission Mains Ranging in size from 10 to 36 inch Diameter	$85,410,000
Jack & Bore w/Pits	$2,700,000
Pavement Replacement	$6,000,000
Landscaping, Etc.	$2,000,000
Easements & Land Acquistion	$1,000,000
Remote Booster Pump Station & 1 MG Reservoir	$1,000,000
Sub-Total: Piping and Remote Storage and Pumping	$98,110,000
Main Treatment & Pumping Facilities	
Main Booster Pump Station & 3 MG Reservoir	$6,000,000
Low Lift Pumping Station & Raw Water Transmission Main	$5,000,000
Water Treatment Plant, 3 MG Storage, Pumping, Chemical Facilities, and Payment to LCPWD	$15,000,000
Sub-Total: Treatment Facilities, Pumping Facilities and Storage	$26,000,000
Total Estimated Construction Cost	$124,110,000
Undeveloped Design Details @ 10%	$12,410,000
Construction Contingencies @ 15%	$18,620,000
Sub-Total	$155,140,000
Engineering Fees & Administrative Costs @ 15%	$23,270,000
Total Estimated Project Cost	**$178,410,000**

Notes: (1) Based on a Maximum Day to Average Day Ratio of 1.75.
(2) Includes all Group communities.
(3) Includes revised pipeline route.

Unit costs were developed in order to obtain a relative sense of what impact these costs would have on the communities. The unit costs, or cost per thousand gallons of water, are based on the following assumptions. It is assumed that the capital costs would be funded entirely by bonds. Based on discussions with the project's financial consultant, Speer Financial, Inc., it is also assumed that the bonds would sell for 5% for 30 year bonds. Assumed operation, maintenance and replacement costs were added to the annual bond costs. Please note that these are wholesale numbers only and do not include any markup for each community, as each one is probably somewhat different. Each community will need to add the costs of operating and improving their individual water distribution system.

The first cost estimates were used to evaluate the impact of including the Village of Wauconda in the system. One estimate was prepared for a system including all of the major communities, and one for a system excluding the Village of Wauconda. These estimates were prepared at the request of Wauconda to determine if this community at the far end of the proposed water distribution system was unfairly adding cost to all of the communities in closer geographic proximity to the water source.

The impact of excluding the Village of Wauconda from the system is a unit cost reduction of 1.6 %. This amount is within the level of accuracy of the estimate, so it is reasonable to say that the unit costs are the same with or without Wauconda as a part of the Planning Group. The inclusion of Wauconda in the Planning Group adds cost due to the additional length of pipe and the increased size of the facilities; however, the additional costs are spread out over a greater volume of water so the unit costs remain the same. In other words, the additional customers will carry their fair share of the costs. It was therefore concluded that Wauconda should remain a member of the Planning Group.

The next cost evaluation assessed the impact of the maximum day to average flow ratio (peaking factor). The study started with the assumption that a peaking factor of 2.0 would be appropriate. This is approximately equal to the average peaking factor for all of the communities, as shown in Section 4. However, other large water systems operate with lower peaking factors. For instance, Central Lake County JAWA uses a peaking factor of 1.58. To evaluate the impact of the peaking factor, costs were prepared using factors of both 1.75 and 2.0.

The unit cost difference with a reduction of the peaking factor from 2.0 to 1.75 is a unit cost reduction of 6.5%. This represents a small percentage improvement in the cost picture. However, given the magnitude of the project, even small percentage improvements represent significant dollars. In this case, 6.5% is over $11 million.

The remainder of the study assumed the use of a peaking factor of 1.75. As this project is developed, further reduction of the peaking factor should be considered.

FINANCING

The County engaged the services of Speer Financial, Inc., to further study the project financing options. For purposes of the analysis, it was assumed that the system would be constructed in the years 2010 through 2013, and that the first full year of operation would be 2014. An area growth rate of 2% (growth in equalized assessed value) was employed, and a bond coupon rate of 5% was used. A bond period of 30 years was used. Speer Financial evaluated the project costs using two sources of capital and three sources of revenue.

The capital funding sources for the money to fund the initial project construction are:

- Water Revenue Bonds
- Special Service Area Bonds

Three sources of revenue were identified to generate the cash necessary to repay the bonds and pay for the system operating cost:

- Water user fees
- Connection fees
- Property taxes

The project total capital cost for the financial analysis is $178,410,000. The project would be financed using a Special Service Area (SSA) bond in the amount of $78,000,000 and a Water Revenue bond of $100,410,000. Total debt service for the SSA bond issue, including principal and interest, would be $4,339,500 for the first full year of system operation. This amount would be repaid through SSA property taxes. Based on current equalized assessed valuation, the annual tax on a $300,000 home would be $188.

The Water Revenue Bond payments become part of the annual system operating budget. This budget also includes operation, maintenance and replacement accounts (O, M & R). The first year Water Revenue Bond payment, including principal and interest, would be $5,550,500. O, M & R for the first full year of operation is estimated to be $4,513,300, for a total annual expense of $10,063,800. Income from connection fees for new services is estimated to be $2,155,100. Remaining necessary income to meet the estimated annual

expenses is $7,908,700. The calculated water rate to provide this level of income is a rate of $2.63 per 1,000 gallons. The typical annual residential water bill would be $240. Total annual cost for a typical homeowner, including both the property tax and water bill, would be $428. The financial analysis projects the following fee structure:

Annual SSA property tax:	$188
Water rate:	$2.63 per 1,000 gallons
Connection fee:	$3,000 per connection

Income for the first operating year is projected as follows:

SSA property taxes:	$4,399,500
Water revenue:	$7,908,700
Connection fees:	$2,155,100
Total:	$14,463,300

Expenses for the first operating year are projected as follows:

SSA bonds:	$4,399,500
Water Revenue Bond:	$5,550,500
O, M & R:	$4,513,300
Total:	$14,463,300

Costs in subsequent years would increase. However, the increase is anticipated to be less than the rate of growth in the area. The anticipated annual SSA property tax for a $300,000 house would remain the same for the entire planning period. Growth in the total SSA property tax receipts would be provided by the increasing number of homes over the planning period. The water rates would increase throughout the planning period at a rate of 2.3% per year, which is less than the typical inflation rate of 3%. Additional details on the financial analysis are provided in Appendix B.

SECTION 7
ORGANIZATION AND MANAGEMENT

ORGANIZATION

This section presents a brief discussion on the types of organizations or governing bodies for a water group comprised of a number of diverse communities. This discussion is not meant to be all inclusive, but rather a general discussion of the advantages and disadvantages of each type of governing body. Should the Planning Group decide to proceed with the next step in this process, it is recommended that legal counsel be engaged to conduct an in-depth analysis of the various components for each governing system to determine which is most advantageous to the Planning Group.

The governing body will be the "owner" of the water system. This entity will decide how (and how much) revenue is generated, collect the revenue, pay the bills, build the system, operate the system, resolve disputes, hire staff, negotiate and own easements, maintain the system, etc. A key element in any governance discussion is control and accountability. In a group comprised of a number of communities, each member will want to have a say in the operation of the system.

There are three main types of governing structures recognized by state statute for the operation of a multiple member water utility. Each has its advantages and disadvantages, which will be discussed below. Of course, intergovernmental agreements can be drawn up and/or new types of governance can be presented to the Legislature for approval, but this discussion is limited to those common governmental entities already in place. It seems unlikely that drafting a new type of governance would be advantageous to the Planning Group, as it would likely take considerable effort and time to accomplish.

The three existing types of governing bodies appropriate for this endeavor are as follows:

- Public Water District
- Water Commission
- Joint Action Water Agency

Public Water District

A Public Water District board is comprised of members appointed by the county to represent various areas and communities within the water district. There are a number of water districts in the State of Illinois, the closest of which is the Lake County Public

Water District located in Zion. It should be noted that this District is not part of Lake County government. Although the County appoints the District Board members, the District remains independent of the County. A District Board is made of members (the number of members is determined by the size of the District) appointed by the county to represent various area/communities. The communities that make up the District do not have the authority to appoint members to the Board, but certainly can provide input. The District generates revenue through water usage fees, but can levy a sales tax. Property taxes can be levied, but only after a successful referendum. A Water District has the ability to procure easements more readily than a city or village, which is an important consideration during construction. The Board has the ability to sell revenue bonds, but not general obligation bonds backed by a property tax levy without the aforementioned referendum.

Water Commission

A Water Commission is generally set up with members appointed by their respective communities. In addition, the County in which the Commission is formed has the option to appoint an additional member. Once the Commission is formed, the Commission and its members are theoretically independent of their respective community governing bodies. Once again, the communities can provide input to the Commission discussions. One commission resolved this accountability issue by appointing their respective Village Managers as their member representatives.

A Water Commission can only generate revenue from water sales and does not have the authority to collect real estate taxes or sales taxes. In addition, Water Commissions can only sell revenue bonds, not general obligation (GO) bonds, as they do not have the authority to back up the bonds with property taxes. In the past, however, intergovernmental agreements between a Water Commission and its members have had the member communities sell GO bonds and turn the money over to the Commission. Water Commissions in general also have the authority to obtain easements more readily than a city or village.

It should be noted that the Du Page Water Commission, the largest in the State of Illinois, was set up by separate state statute, and therefore, is operated somewhat differently than the more “traditional” Water Commission. It has the ability to levy property taxes and collect sales tax, and its governing body has a different makeup than other Water Commissions.

Joint Action Water Agency

A Joint Action Water Agency (JAWA) is a relatively new governing body. It was established by state statute in the 1980s. There are currently two JAWAs, including the Central Lake County JAWA located in Gurnee, Illinois. JAWAs were created to resolve control and accountability issues by having each member appoint their own representative/director (with equal authority regardless of size) to the board. Therefore, elected officials can serve on the board. Furthermore, an Executive Committee can be created, made up of municipal managers for the administration of the policies determined by the Board of Directors. Similar to Public Water Districts and Water Commissions, a JAWA cannot levy sales tax or property taxes without a referendum. Therefore, revenue is derived from the sale of water to their members. In the case of Central Lake County JAWA, each member community passed a property tax referendum early on during the project phase in order to collect property tax revenue.

In view of the current situation and cognizant of the discussions with the Planning Group, it seems that a JAWA type format would be most satisfactory to all parties in the Group. Accountability and control are important issues that will need to be addressed, and the JAWA format seems to address these issues most appropriately. This decision does not need to made at this juncture, but should be developed if the project moves to the next step. Legal council should be engaged to develop an in-depth understanding of the potential forms of governance.

MANAGEMENT

Management of an “agency” is usually set up such that the governing body/Board of Directors sets policies and rates, performs other administrative functions, and engages staff to conduct day-to-day operations. It will need to be established early in the process, should this project move ahead. Policy decisions will need to be made on the desired type of governance. This includes the possibility of setting up an Executive Committee or even a technical committee during the design and construction of the project. Other issues to be determined include such things as where water is to be delivered, how many connection points each member will have and at what pressure, etc.

Negotiations with the LCPWD to finalize coordination/payment issues for use of its facilities and property will need to be finalized. Professional services will be required in the areas of legal council, financial advice, bond council and engineering services. Staff

will need to be hired at a relatively early stage to handle day-to-day issues, such as the coordination of members, engineering consultants, contractors, etc. Once the system is operational, the Board can concentrate on policy issues while the staff concentrates on the day-to-day operations.

During the developmental process, decisions will also need to be made on whether, for example, maintenance, meter reading and other routine operational functions will be undertaken by a permanent in-house staff, pooled with member communities, or other options.

SECTION 8
ALLOCATION AND PERMITTING ISSUES

ALLOCATIONS

This study is predicated on the receipt of a Lake Michigan allocation from the IDNR. The conveyance of Lake Michigan water not returned to the lake is controlled by the IDNR, resulting from many years of negotiations and litigation. Parties to these negotiations include all of the Great Lake states and Canada. Throughout the years there have been many decrees that limit the withdrawal of Lake Michigan water. At the present time, the State of Illinois is restricted to withdrawing (for all purposes) a total of 3,200 cubic feet per second, or about 2.1 billion gallons per day. While this seems like a significant amount, it should be noted that the lake supplies drinking water to hundreds of communities including virtually all of the municipalities and substantial unincorporated areas in Cook and Du Page Counties, a large portion of Lake County, and parts of Will County.

It also should be noted that drinking water only makes up a portion of the water diverted from Lake Michigan. Other uses include navigation, sewage dilution and storm water that drains away from the lake. Since the amount of water to be withdrawn from the lake is finite, the IDNR was tasked to determine the best use for the water via the allocation process.

As described on the Department's website, their allocation objective is as follows:

"The importance of wise, long-term water resource planning and the large investments that must be made to secure new water supply sources requires that the objectives of an allocation program clearly address the problems to be solved. In Illinois' case the objectives, or goals, of Illinois' allocation program can be summarized as follows;

To make the greatest amount of Lake Michigan water available for domestic water supply.

To use Lake Michigan water allocations as a tool to preserve groundwater resources for communities in northeastern Illinois who will not have access to a Lake Michigan water supply.

To make long-term allocations so that communities receiving an allocation for the first time can secure the needed financing to construct regional water distribution systems.

To carefully consider the competing needs of all water users in the region so that allocations promote the efficient development of water supplies in the region in light of long range needs and objectives.

To require all users of Lake Michigan water to conserve and manage this resource."

Furthermore, the IDNR website describes the allocation process in general as:

"A successful water allocation program must combine a technically defensible methodology with an administrative process that follows legally defensible procedures and treats all applicants fairly. To achieve this goal, Illinois' allocation process consists of the following key elements:

An active public participation program.

An identification of available water supply sources.

A long-range water demand forecasting methodically.

Formal allocation hearings on all requests.

Issuance of an Allocation Order.

On going monitoring of water use and consumption by all permittees.

Formal process to make adjustments in allocations."

This feasibility study is the first step in the allocation process. It allowed the Planning Group to determine if there is a long term need, if it is feasible and cost effective, and if Lake Michigan water is available. If it is determined by the Planning Group that it is feasible, then the formal allocation process begins. In preliminary discussions with IDNR, they stated that a case must be made to proceed to the allocation process. There is no guarantee that an allocation will be granted, but we believe that this study indicates that a strong case can be made to proceed.

If this project proceeds, each member must file for an allocation separately even though a JAWA or other governing vehicle may be created. This should be a coordinated effort. Applications need to be made and hearings held before an allocation can be made.

Should the member communities ultimately receive a Lake Michigan allocation, they will be required to pass water conservation ordinances as part of the agreement. These

ordinances typically include low water use fixtures and sprinkler restrictions and may help mitigate maximum day demand figures in the future.

As a result of the IDNR allocation process, communities would be required to shut down all deep wells after Lake Michigan water is obtained. In the past, some communities have kept and maintained certain deep wells for emergencies only. Shallow wells need not be abandoned, however, since any water contract between the Planning Group and its members will be on a "take or pay" basis, it would not be cost-effective to continue the use of any wells. A "take or pay" agreement will likely state that a member community would have to pay the Planning Group for any water delivered to their customers *regardless* of its source. This is necessary for the sale of bonds at an acceptable rate (or at all).

PERMITTING

Should a project of this magnitude proceed, there will be a number of intergovernmental issues and permitting required. These typically include discussions with the IEPA and local municipal governments (especially those affected during construction), railroads, waterways, local, county and state roads, Forest Preserves and the like. These are key discussions as they may lead to changes, in pipeline routes for example, that will need to be dealt with in the early stages of the project.

SECTION 9
CONCLUSIONS AND RECOMMENDATIONS

This Section summarizes our conclusions and recommendations for the improvements needed to achieve the goal of obtaining Lake Michigan water as the water supply source for the Planning Group. Figure 1-1, located in the Executive Summary section, presents a map of the proposed overall system.

CONCLUSIONS

After numerous meetings with the Planning Group (including each member individually), financial consultants, and the Lake County Public Water District, it was concluded that obtaining Lake Michigan water is feasible. It is recommended that the Planning Group proceed to the next steps of this important and necessary project. Meetings will be held with each member of the Planning Group to present the findings of this study. From those meetings, a degree of commitment will be determined.

Our conclusion is based on some of the following issues discussed during the course of the study:

- There is need for a sufficient quantity of high quality water to match the significant growth that will occur in the present and future.
- Well supply may not be adequate in quantity and quality to meet the needs of the Planning Group.
- Well supply may require increasing degrees of treatment in the future.
- There is a finite limit of Lake Michigan water available due to the allocation process and increasing restrictions.
- The construction costs, while significant, will never be less expensive than today and will only increase in the future.
- Financing costs are relatively low at this point in time compared to historical numbers.
- There is a willing partner for access to the Lake and they are offering use of their facilities and land at a reasonable cost.

- Recent technology (membranes) reduces the construction cost of a treatment facility compared to the historical conventional type treatment facility.
- Pilot testing of the membrane technology is required by the IEPA and has already been completed by LCPWD, saving both time and money.

The project, as currently envisioned, consists of the following components:

- 15 mgd submerged membrane water treatment plant at LCPWD.
- Raw water intake well and pumping station.
- 36-inch diameter raw water transmission main.
- 45 miles of water transmission/distribution mains ranging in size from 10- to 36-inches in diameter.
- 3 million gallons ground storage at the plant site.
- 2 booster pumping stations within the transmission system.
- Additional storage within the transmission system (4 million gallons total).
- The water treatment plant site would also have pumping facilities, chemical facilities and an interconnection to the LCPWD system.

The estimated capital cost for the system as described above is $178,410,000. The water rate, on a wholesale basis, is estimated to be $2.63 per 1,000 gallons.

It should be noted that any change in the composition of the Planning Group could impact the financial characteristics of the project. In particular, additional members could have a positive impact by spreading the costs over a larger base while not significantly increasing the construction cost.

RECOMMENDATIONS

After each member community has had the opportunity to discuss the conclusions of this study, it is recommended that additional steps be taken to pursue Lake Michigan water. Some of these preliminary steps are as follows:

- Begin discussing short term financial needs and options for “seed” money to continue progress. This may include decisions on intergovernmental agreements, special service areas, connections fees, and bond sales.
- Initiate discussions, with help from legal council, on the formation of an agency.
- Continue discussions with financial consultants to resolve long term funding issues.
- Continue preliminary engineering work, particularly with allocation issues.
- Meet with IDNR to discuss allocation procedures.
- Prepare a project schedule with deliverables and benchmarks in concert with the financing scheme.

Once the group has reached successful conclusions to the above items, permanent steps then need to be undertaken. Some of these steps are as follows:

- Discuss initial financing for project startup including engineering, property acquisition, easements, staffing, etc. This may include final decisions on special service areas, connections fees, and bond sales.
- Prepare individual water allocation submittals for each member to the IDNR.
- Prepare a water transmission main route study to finalize main locations taking into account such things as need for easements, ease of construction, potential delays, pavement replacement, etc.
- Identify property needs and begin the acquisition process.

Once these steps have begun and/or are completed, engineering and construction can begin. The projects would be broken up into a number of components to encourage competition and help hold costs down. Long term financing to fund the construction would need to be completed on or about the time of construction commencement. It is expected that construction would take at least 3 years.

APPENDIX A

PROJECT COST ESTIMATE

TABLE A-1
TOTAL ESTIMATED PROJECT COST
AUGUST 2007

ITEM	COST
Pipeline System From Plant to Customers	
238,000 of Water Transmission Mains Ranging in size from 36 to 10 inch Diameter	$85,410,000
Jack & Bore w/Pits	$2,700,000
Pavement Replacement	$6,000,000
Landscaping, Etc.	$2,000,000
Easements & Land Acquistion	$1,000,000
Remote Booster Pump Station & 1 MG Reservoir	$1,000,000
Sub-Total: Piping and Remote Storage and Pumping	$98,110,000
Main Treatment & Pumping Facilities	
Main Booster Pump Station & 3 MG Reservoir	$6,000,000
Low Lift Pumping Station & Raw Water Transmission Main	$5,000,000
Water Treatment Plant, 3 MG Storage, Pumping, Chemical Facilities, and Payment to LCPWD	$15,000,000
Sub-Total: Treatment Facilities, Pumping Facilities and Storage	$26,000,000
Total Estimated Construction Cost	$124,110,000
Undeveloped Design Details @ 10%	$12,410,000
Construction Contingencies @ 15%	$18,620,000
Sub-Total	$155,140,000
Engineering Fees & Administrative Costs @ 15%	$23,270,000
Total Estimated Project Cost	**$178,410,000**

Notes: (1) Based on a Maximum Day to Average Day Ratio of 1.75.
(2) Includes all Group communities.
(3) Includes revised pipeline route.

TABLE NO. A-2
PIPELINE COSTS
August 2007

Pipe Size (Inches)	Length (Feet)	Unit Costs ($/Linear Foot)	Total
36	71,000	$450	$31,950,000
30	31,000	$400	$12,400,000
24	12,000	$360	$4,320,000
20	21,000	$360	$7,560,000
18	20,000	$340	$6,800,000
16	7,000	$300	$2,100,000
14	13,000	$300	$3,900,000
12	34,000	$260	$8,840,000
10	29,000	$260	$7,540,000
TOTALS	**238,000**		**$85,410,000**

TABLE NO. A-3
JACK AND BORE PIPING COSTS
August 2007

	Size of Transmission Main	Crossing	Pipe	Total	Length (feet)
Interstate Crossing (300 ft)					
I-94	36	$ 183,000	$ 26,700	$ 209,700	300
Railroad Crossings (200 ft)				$ -	
Metra/Union Pacific North Line	36	$ 122,000	$ 17,800	$ 139,800	200
Union Pacific	36	$ 122,000	$ 17,800	$ 139,800	200
Canadian Pacific	36	$ 122,000	$ 17,800	$ 139,800	200
Wisconsin Central	24	$ 80,000	$ 14,000	$ 94,000	200
Milwaukee District North Line	16	$ 48,000	$ 11,000	$ 59,000	200
Illinois Route Crossings (80 ft)					
Illinois Route 137	36	$ 48,800	$ 7,120	$ 55,920	80
Illinois Route 131	36	$ 48,800	$ 7,120	$ 55,920	80
Illinois Route 41	36	$ 48,800	$ 7,120	$ 55,920	80
Illinois Route 45	30	$ 40,000	$ 5,920	$ 45,920	80
Illinois Route 45	10	$ 15,200	$ 3,800	$ 19,000	80
Illinois Route 83	24	$ 32,000	$ 5,200	$ 37,200	80
Illinois Route 59	20	$ 26,000	$ 4,880	$ 30,880	80
Illinois Route 59	8	$ 14,400	$ 3,600	$ 18,000	80
Illinois Route 134	14	$ 16,000	$ 4,600	$ 20,600	80
Illinois Route 120/60	10	$ 15,200	$ 3,800	$ 19,000	80
Illinois Route 120/60	10	$ 15,200	$ 3,800	$ 19,000	80
Illinois Route12/59	10	$ 15,200	$ 3,800	$ 19,000	80
Illinois Route 173	36	$ 48,800	$ 8,900	$ 57,700	80
Illinois Route 173	12	$ 16,000	$ 4,000	$ 20,000	80
County Highway Crossings (80 ft)					
Lewis Avenue	36	$ 48,800	$ 7,120	$ 55,920	80
Kenosha Road	36	$ 48,800	$ 7,120	$ 55,920	80
Kilbourne Road	36	$ 48,800	$ 7,120	$ 55,920	80
Hunt Club Road	30	$ 32,000	$ 5,920	$ 37,920	80
Hunt Club Road	14	$ 19,200	$ 4,600	$ 23,800	80
Stearns School Road	14	$ 19,200	$ 4,600	$ 23,800	80
Deep Lake Road	30	$ 40,000	$ 5,920	$ 45,920	80
Grass Lake Road	24	$ 32,000	$ 5,200	$ 37,200	80
Gilmer Road	12	$ 16,000	$ 4,000	$ 20,000	80
				$ 1,612,560	3140
Jacking Pits	29 @ $37,500 each			$ 1,087,500	
TOTAL				$ 2,700,060	

APPENDIX B

FINANCIAL TABLES

TABLE B-1

EQUALIZED ASSESSED VALUATION
Actual and Projected
August 2007

Incorporated Municipalities	2006 EAV
Antioch (V)	$ 382,597,319
Fox Lake (V) Lake Co. Portion	307,016,506
Fox Lake (V) McHenry Co. Portion	17,310,204
Lake Villa (V)	234,130,851
Lindenhurst (V)	385,413,216
Old Mill Creek (V)	9,077,897
Wauconda (V)	408,185,319
Subtotal	$ 1,743,731,312
Unincorporated Areas	
Grandwood Park	$ 176,370,240
Northwest Region (Fox Lake Hills)	53,103,277
Subtotal	$ 229,473,517
Total Estimated EAV	$ 1,973,204,829

			Home Valued at $300,000				
Levy Year	EAV	Rate of Growth	Home Value	EAV	Rate of Growth	Less: Exemption	Net
2006	$ 1,973,204,829	**Actual**	$ 300,000	$ 100,000			
2007	1,992,936,877	1%	300,000	100,000	0%	$ (5,000)	95,000
2008	2,012,866,246	1%	300,000	100,000	0%	(5,000)	95,000
2009	2,032,994,909	1%	300,000	100,000	0%	(5,000)	95,000
2010	**2,053,324,858**	**1%**	**300,000**	**100,000**	**0%**	**(5,000)**	**95,000**
2011	2,094,391,355	2%	300,000	100,000	0%	(5,000)	95,000
2012	2,136,279,182	2%	300,000	100,000	0%	(5,000)	95,000
2013	2,179,004,765	2%	300,000	100,000	0%	(5,000)	95,000
2014	2,222,584,861	2%	300,000	100,000	0%	(5,000)	95,000
2015	2,267,036,558	2%	300,000	100,000	0%	(5,000)	95,000
2016	2,312,377,289	2%	300,000	100,000	0%	(5,000)	95,000
2017	2,358,624,835	2%	300,000	100,000	0%	(5,000)	95,000
2018	2,405,797,332	2%	300,000	100,000	0%	(5,000)	95,000
2019	2,453,913,278	2%	300,000	100,000	0%	(5,000)	95,000
2020	2,502,991,544	2%	300,000	100,000	0%	(5,000)	95,000
2021	2,553,051,375	2%	300,000	100,000	0%	(5,000)	95,000
2022	2,604,112,402	2%	300,000	100,000	0%	(5,000)	95,000
2023	2,656,194,650	2%	300,000	100,000	0%	(5,000)	95,000
2024	2,709,318,543	2%	300,000	100,000	0%	(5,000)	95,000
2025	2,763,504,914	2%	300,000	100,000	0%	(5,000)	95,000
2026	2,818,775,012	2%	300,000	100,000	0%	(5,000)	95,000
2027	2,875,150,513	2%	300,000	100,000	0%	(5,000)	95,000
2028	2,932,653,523	2%	300,000	100,000	0%	(5,000)	95,000
2029	2,991,306,593	2%	300,000	100,000	0%	(5,000)	95,000
2030	3,051,132,725	2%	300,000	100,000	0%	(5,000)	95,000
2031	3,112,155,380	2%	300,000	100,000	0%	(5,000)	95,000
2032	3,174,398,487	2%	300,000	100,000	0%	(5,000)	95,000
2033	3,237,886,457	2%	300,000	100,000	0%	(5,000)	95,000
2034	3,302,644,186	2%	300,000	100,000	0%	(5,000)	95,000
2035	3,368,697,070	2%	300,000	100,000	0%	(5,000)	95,000
2036	3,436,071,011	2%	300,000	100,000	0%	(5,000)	95,000
2037	3,504,792,432	2%	300,000	100,000	0%	(5,000)	95,000
2038	3,574,888,280	2%	300,000	100,000	0%	(5,000)	95,000
2039	3,646,386,046	2%	300,000	100,000	0%	(5,000)	95,000

TABLE B-2

Scenario Number One

$78,000,000 Special Service Area Bonds, Series 2010

August 2007

Net Debt Service Schedule

Date	Principal	Coupon	Interest	Total P+I	CIF	Net New D/S
12/15/2010	-	-	-	-	-	-
12/15/2011	-	-	3,900,000.00	3,900,000.00	(3,900,000.00)	-
12/15/2012	-	-	3,900,000.00	3,900,000.00	(3,900,000.00)	-
12/15/2013	-	-	3,900,000.00	3,900,000.00	(3,900,000.00)	-
12/15/2014	410,000.00	5.000%	3,900,000.00	4,310,000.00	-	4,310,000.00
12/15/2015	520,000.00	5.000%	3,879,500.00	4,399,500.00	-	4,399,500.00
12/15/2016	630,000.00	5.000%	3,853,500.00	4,483,500.00	-	4,483,500.00
12/15/2017	755,000.00	5.000%	3,822,000.00	4,577,000.00	-	4,577,000.00
12/15/2018	880,000.00	5.000%	3,784,250.00	4,664,250.00	-	4,664,250.00
12/15/2019	1,020,000.00	5.000%	3,740,250.00	4,760,250.00	-	4,760,250.00
12/15/2020	1,165,000.00	5.000%	3,689,250.00	4,854,250.00	-	4,854,250.00
12/15/2021	1,320,000.00	5.000%	3,631,000.00	4,951,000.00	-	4,951,000.00
12/15/2022	1,485,000.00	5.000%	3,565,000.00	5,050,000.00	-	5,050,000.00
12/15/2023	1,660,000.00	5.000%	3,490,750.00	5,150,750.00	-	5,150,750.00
12/15/2024	1,850,000.00	5.000%	3,407,750.00	5,257,750.00	-	5,257,750.00
12/15/2025	2,045,000.00	5.000%	3,315,250.00	5,360,250.00	-	5,360,250.00
12/15/2026	2,255,000.00	5.000%	3,213,000.00	5,468,000.00	-	5,468,000.00
12/15/2027	2,475,000.00	5.000%	3,100,250.00	5,575,250.00	-	5,575,250.00
12/15/2028	2,710,000.00	5.000%	2,976,500.00	5,686,500.00	-	5,686,500.00
12/15/2029	2,960,000.00	5.000%	2,841,000.00	5,801,000.00	-	5,801,000.00
12/15/2030	3,225,000.00	5.000%	2,693,000.00	5,918,000.00	-	5,918,000.00
12/15/2031	3,505,000.00	5.000%	2,531,750.00	6,036,750.00	-	6,036,750.00
12/15/2032	3,800,000.00	5.000%	2,356,500.00	6,156,500.00	-	6,156,500.00
12/15/2033	4,115,000.00	5.000%	2,166,500.00	6,281,500.00	-	6,281,500.00
12/15/2034	4,445,000.00	5.000%	1,960,750.00	6,405,750.00	-	6,405,750.00
12/15/2035	4,795,000.00	5.000%	1,738,500.00	6,533,500.00	-	6,533,500.00
12/15/2036	5,165,000.00	5.000%	1,498,750.00	6,663,750.00	-	6,663,750.00
12/15/2037	5,560,000.00	5.000%	1,240,500.00	6,800,500.00	-	6,800,500.00
12/15/2038	5,970,000.00	5.000%	962,500.00	6,932,500.00	-	6,932,500.00
12/15/2039	6,410,000.00	5.000%	664,000.00	7,074,000.00	-	7,074,000.00
12/15/2040	6,870,000.00	5.000%	343,500.00	7,213,500.00	-	7,213,500.00
Total	**$78,000,000.00**	**-**	**$86,065,500.00**	**$164,065,500.00**	**(11,700,000.00)**	**$152,365,500.00**

TABLE B-3

Scenario Number One

$100,410,000 Water Revenue Bonds, Series 2011

August 2007

Net Debt Service Schedule

Date	Principal	Coupon	Interest	Total P+I	CIF	Net New D/S
05/01/2011	-	-	-	-	-	-
05/01/2012	-	-	5,020,500.00	5,020,500.00	(5,020,500.00)	-
05/01/2013	-	-	5,020,500.00	5,020,500.00	(5,020,500.00)	-
05/01/2014	-	-	5,020,500.00	5,020,500.00	(5,020,500.00)	-
05/01/2015	530,000.00	5.000%	5,020,500.00	5,550,500.00	-	5,550,500.00
05/01/2016	665,000.00	5.000%	4,994,000.00	5,659,000.00	-	5,659,000.00
05/01/2017	815,000.00	5.000%	4,960,750.00	5,775,750.00	-	5,775,750.00
05/01/2018	970,000.00	5.000%	4,920,000.00	5,890,000.00	-	5,890,000.00
05/01/2019	1,135,000.00	5.000%	4,871,500.00	6,006,500.00	-	6,006,500.00
05/01/2020	1,310,000.00	5.000%	4,814,750.00	6,124,750.00	-	6,124,750.00
05/01/2021	1,500,000.00	5.000%	4,749,250.00	6,249,250.00	-	6,249,250.00
05/01/2022	1,700,000.00	5.000%	4,674,250.00	6,374,250.00	-	6,374,250.00
05/01/2023	1,915,000.00	5.000%	4,589,250.00	6,504,250.00	-	6,504,250.00
05/01/2024	2,140,000.00	5.000%	4,493,500.00	6,633,500.00	-	6,633,500.00
05/01/2025	2,380,000.00	5.000%	4,386,500.00	6,766,500.00	-	6,766,500.00
05/01/2026	2,630,000.00	5.000%	4,267,500.00	6,897,500.00	-	6,897,500.00
05/01/2027	2,900,000.00	5.000%	4,136,000.00	7,036,000.00	-	7,036,000.00
05/01/2028	3,190,000.00	5.000%	3,991,000.00	7,181,000.00	-	7,181,000.00
05/01/2029	3,490,000.00	5.000%	3,831,500.00	7,321,500.00	-	7,321,500.00
05/01/2030	3,810,000.00	5.000%	3,657,000.00	7,467,000.00	-	7,467,000.00
05/01/2031	4,150,000.00	5.000%	3,466,500.00	7,616,500.00	-	7,616,500.00
05/01/2032	4,510,000.00	5.000%	3,259,000.00	7,769,000.00	-	7,769,000.00
05/01/2033	4,895,000.00	5.000%	3,033,500.00	7,928,500.00	-	7,928,500.00
05/01/2034	5,295,000.00	5.000%	2,788,750.00	8,083,750.00	-	8,083,750.00
05/01/2035	5,720,000.00	5.000%	2,524,000.00	8,244,000.00	-	8,244,000.00
05/01/2036	6,175,000.00	5.000%	2,238,000.00	8,413,000.00	-	8,413,000.00
05/01/2037	6,650,000.00	5.000%	1,929,250.00	8,579,250.00	-	8,579,250.00
05/01/2038	7,155,000.00	5.000%	1,596,750.00	8,751,750.00	-	8,751,750.00
05/01/2039	7,685,000.00	5.000%	1,239,000.00	8,924,000.00	-	8,924,000.00
05/01/2040	8,250,000.00	5.000%	854,750.00	9,104,750.00	-	9,104,750.00
05/01/2041	8,845,000.00	5.000%	442,250.00	9,287,250.00	-	9,287,250.00
Total	**$100,410,000.00**	**-**	**$110,790,500.00**	**$211,200,500.00**	**(15,061,500.00)**	**$196,139,000.00**

TABLE B-4

Scenario Number One

BOND ANALYSIS

August 2007

$78,000,000 Special Service Area Bonds, Series 2010
$100,410,000 Water Revenue Bonds, Series 2011
Debt Service - Estimated at 5%
2006 EAV - North Lake County Joint Action Water Agency: $1,973,204,829 (Incorporated and Unincorporated Areas)
SSA Tax Rate Assumption: $300,000 Value Home Assessed at 1/3 of Fair Market Value with $5,000 Homestead Exemption

											Per Home - SSA Tax Analysis (1)					
		$78,000,000		$ 100,410,000												
Levy Year	Calendar Year	**SSA** Bonds	Rate of Growth	**Water Revenue** Bonds	Rate of Growth	Total Debt Service		SSA EAV	Rate of Growth	SSA Tax Rate	Average Home Value	Rate of Growth	Equalized Assessed Valuation	EAV After Exemptions	Annual Tax $300,000 Home	Rate of Growth
2010	2011	(2)				(2)		$ 2,053,324,858	**Base**		**$ 300,000**	**Base**	**$ 100,000**	**$ 95,000**		
2011	2012	(2)		(3)		(2) (3)		2,094,391,355	2%		300,000	0%	100,000	95,000		
2012	2013	(2)		(3)		(2) (3)		2,136,279,182	2%		300,000	0%	100,000	95,000		
2013	2014	$ 4,310,000	N.A.	(3)		$ 4,310,000	(4)	2,179,004,765	2%	$ 0.20	300,000	0%	100,000	95,000	$ 188	
2014	2015	4,399,500	2%	$ 5,550,500	N.A.	9,950,000		2,222,584,861	2%	0.20	300,000	0%	100,000	95,000	188	0%
2015	2016	4,483,500	2%	5,659,000	2%	10,142,500		2,267,036,558	2%	0.20	300,000	0%	100,000	95,000	188	0%
2016	2017	4,577,000	2%	5,775,750	2%	10,352,750		2,312,377,289	2%	0.20	300,000	0%	100,000	95,000	188	0%
2017	2018	4,664,250	2%	5,890,000	2%	10,554,250		2,358,624,835	2%	0.20	300,000	0%	100,000	95,000	188	0%
2018	2019	4,760,250	2%	6,006,500	2%	10,766,750		2,405,797,332	2%	0.20	300,000	0%	100,000	95,000	188	0%
2019	2020	4,854,250	2%	6,124,750	2%	10,979,000		2,453,913,278	2%	0.20	300,000	0%	100,000	95,000	188	0%
2020	2021	4,951,000	2%	6,249,250	2%	11,200,250		2,502,991,544	2%	0.20	300,000	0%	100,000	95,000	188	0%
2021	2022	5,050,000	2%	6,374,250	2%	11,424,250		2,553,051,375	2%	0.20	300,000	0%	100,000	95,000	188	0%
2022	2023	5,150,750	2%	6,504,250	2%	11,655,000		2,604,112,402	2%	0.20	300,000	0%	100,000	95,000	188	0%
2023	2024	5,257,750	2%	6,633,500	2%	11,891,250		2,656,194,650	2%	0.20	300,000	0%	100,000	95,000	188	0%
2024	2025	5,360,250	2%	6,766,500	2%	12,126,750		2,709,318,543	2%	0.20	300,000	0%	100,000	95,000	188	0%
2025	2026	5,468,000	2%	6,897,500	2%	12,365,500		2,763,504,914	2%	0.20	300,000	0%	100,000	95,000	188	0%
2026	2027	5,575,250	2%	7,036,000	2%	12,611,250		2,818,775,012	2%	0.20	300,000	0%	100,000	95,000	188	0%
2027	2028	5,686,500	2%	7,181,000	2%	12,867,500		2,875,150,513	2%	0.20	300,000	0%	100,000	95,000	188	0%
2028	2029	5,801,000	2%	7,321,500	2%	13,122,500		2,932,653,523	2%	0.20	300,000	0%	100,000	95,000	188	0%
2029	2030	5,918,000	2%	7,467,000	2%	13,385,000		2,991,306,593	2%	0.20	300,000	0%	100,000	95,000	188	0%
2030	2031	6,036,750	2%	7,616,500	2%	13,653,250		3,051,132,725	2%	0.20	300,000	0%	100,000	95,000	188	0%
2031	2032	6,156,500	2%	7,769,000	2%	13,925,500		3,112,155,380	2%	0.20	300,000	0%	100,000	95,000	188	0%
2032	2033	6,281,500	2%	7,928,500	2%	14,210,000		3,174,398,487	2%	0.20	300,000	0%	100,000	95,000	188	0%
2033	2034	6,405,750	2%	8,083,750	2%	14,489,500		3,237,886,457	2%	0.20	300,000	0%	100,000	95,000	188	0%
2034	2035	6,533,500	2%	8,244,000	2%	14,777,500		3,302,644,186	2%	0.20	300,000	0%	100,000	95,000	188	0%
2035	2036	6,663,750	2%	8,413,000	2%	15,076,750		3,368,697,070	2%	0.20	300,000	0%	100,000	95,000	188	0%
2036	2037	6,800,500	2%	8,579,250	2%	15,379,750		3,436,071,011	2%	0.20	300,000	0%	100,000	95,000	188	0%
2037	2038	6,932,500	2%	8,751,750	2%	15,684,250		3,504,792,432	2%	0.20	300,000	0%	100,000	95,000	188	0%
2038	2039	7,074,000	2%	8,924,000	2%	15,998,000		3,574,888,280	2%	0.20	300,000	0%	100,000	95,000	188	0%
2039	2040	7,213,500	2%	9,104,750	2%	16,318,250		3,646,386,046	2%	0.20	300,000	0%	100,000	95,000	188	0%
2040	2041		N.A.	9,287,250	2%	9,287,250		3,719,313,767	2%	-						
		$ 152,365,500		$ 196,139,000		$ 348,504,500								Average	$ 188	

Notes: (1) Homes are likely to grow in value. Non inflationary growth due to new development will have the impact of lowering the special service area taxes.
(2) Period of capitalized interest estimated to be from December 15, 2010 through December 15, 2013.
(3) Period of capitalized interest estimated to be from May 1, 2011 through May 1, 2014.
(4) Special service area debt service only. Water revenue bonds are paid from capitalized interest.

TABLE B-5
Scenario Number One
WATER UNIT RATES

$78,000,000 Special Service Area Bonds, Series 2010
$100,410,000 Water Revenue Bonds, Series 2011

						OM & R Expenses				Connection Fee Revenue				
Calendar Year	Population	Number of Customers	Average Water Demand (MGD)	Rate of Growth (%)	Water Revenue Bonds Debt Service	OM & R ($/1,000 gal)	Inflation	Annual OM & R	OM & R Plus Debt	New Customers	Connection Fee	Annual Connection Fee Revenue	Total Revenue Required	Water Rate ($/1,000 gal)
2005	70,974	23,658	6.10	Actual										
2006	72,708	24,236	6.29	3.1%										
2007	74,485	24,828	6.48	3.1%										
2008	76,305	25,435	6.68	3.1%										
2009	78,169	26,056	6.88	3.1%										
2010	80,080	26,693	7.09	3.1%										
2011	82,036	27,345	7.31	3.1%										
2012	84,041	28,014	7.53	3.1%	(1)									
2013	86,094	28,698	7.76	3.1%	(1)									
2014	88,198	29,399	8.00	3.1%	(1)									
2015	90,353	30,118	8.24	3.1%	$5,550,500	1.50	3.0%	$4,513,256	$10,063,756	718	$ 3,000	$ 2,155,136	$7,908,620	$ 2.63
2016	92,561	30,854	8.50	3.1%	$5,659,000	1.55	3.0%	$4,806,268	$10,465,268	736	$ 3,000	$ 2,207,797	$8,257,471	$ 2.66
2017	94,823	31,608	8.76	3.1%	$5,775,750	1.60	3.0%	$5,112,977	$10,888,727	754	$ 3,000	$ 2,261,745	$8,626,982	$ 2.70
2018	97,140	32,380	9.02	3.1%	$5,890,000	1.65	3.0%	$5,433,947	$11,323,947	772	$ 3,000	$ 2,317,011	$9,006,936	$ 2.73
2019	99,513	33,171	9.30	3.1%	$6,006,500	1.70	3.0%	$5,769,763	$11,776,263	791	$ 3,000	$ 2,373,627	$9,402,636	$ 2.77
2020	101,945	33,982	9.58	3.1%	$6,124,750	1.75	3.0%	$6,121,033	$12,245,783	811	$ 3,000	$ 2,431,627	$9,814,156	$ 2.81
2021	104,436	34,812	9.88	3.1%	$6,249,250	1.80	3.0%	$6,488,387	$12,737,637	830	$ 3,000	$ 2,491,044	$10,246,593	$ 2.84
2022	106,988	35,663	10.18	3.1%	$6,374,250	1.85	3.0%	$6,872,482	$13,246,732	851	$ 3,000	$ 2,551,913	$10,694,818	$ 2.88
2023	109,602	36,534	10.49	3.1%	$6,504,250	1.91	3.0%	$7,312,280	$13,816,530	871	$ 3,000	$ 2,614,270	$11,202,260	$ 2.93
2024	112,280	37,427	10.81	3.1%	$6,633,500	1.97	3.0%	$7,772,546	$14,406,046	893	$ 3,000	$ 2,678,150	$11,727,896	$ 2.97
2025	115,024	38,341	11.14	3.1%	$6,766,500	2.03	3.0%	$8,254,118	$15,020,618	915	$ 3,000	$ 2,743,591	$12,277,027	$ 3.02
2026	117,835	39,278	11.48	3.1%	$6,897,500	2.09	3.0%	$8,757,871	$15,655,371	937	$ 3,000	$ 2,810,631	$12,844,740	$ 3.07
2027	120,714	40,238	11.83	3.1%	$7,036,000	2.15	3.0%	$9,284,709	$16,320,709	960	$ 3,000	$ 2,879,309	$13,441,400	$ 3.11
2028	123,664	41,221	12.19	3.1%	$7,181,000	2.21	3.0%	$9,835,574	$17,016,574	983	$ 3,000	$ 2,949,666	$14,066,908	$ 3.16
2029	126,685	42,228	12.57	3.1%	$7,321,500	2.28	3.0%	$10,457,308	$17,778,808	1,007	$ 3,000	$ 3,021,741	$14,757,066	$ 3.22
2030	129,781	43,260	12.95	3.1%	$7,467,000	2.35	3.0%	$11,107,863	$18,574,863	1,032	$ 3,000	$ 3,095,578	$15,479,285	$ 3.27
2031	131,079	43,693	13.08	1.0%	$7,616,500	2.42	3.0%	$11,553,122	$19,169,622	433	$ 3,000	$ 1,297,810	$17,871,812	$ 3.74
2032	132,390	44,130	13.21	1.0%	$7,769,000	2.49	3.0%	$12,006,177	$19,775,177	437	$ 3,000	$ 1,310,788	$18,464,389	$ 3.83
2033	133,713	44,571	13.34	1.0%	$7,928,500	2.56	3.0%	$12,467,137	$20,395,637	441	$ 3,000	$ 1,323,896	$19,071,741	$ 3.92
2034	135,051	45,017	13.48	1.0%	$8,083,750	2.64	3.0%	$12,985,302	$21,069,052	446	$ 3,000	$ 1,337,135	$19,731,917	$ 4.01
2035	136,401	45,467	13.61	1.0%	$8,244,000	2.72	3.0%	$13,512,584	$21,756,584	450	$ 3,000	$ 1,350,506	$20,406,078	$ 4.11
2036	137,765	45,922	13.75	1.0%	$8,413,000	2.80	3.0%	$14,049,113	$22,462,113	455	$ 3,000	$ 1,364,011	$21,098,102	$ 4.20
2037	139,143	46,381	13.88	1.0%	$8,579,250	2.88	3.0%	$14,595,021	$23,174,271	459	$ 3,000	$ 1,377,651	$21,796,620	$ 4.30
2038	140,534	46,845	14.02	1.0%	$8,751,750	2.97	3.0%	$15,201,627	$23,953,377	464	$ 3,000	$ 1,391,428	$22,561,949	$ 4.41
2039	141,940	47,313	14.16	1.0%	$8,924,000	3.06	3.0%	$15,818,905	$24,742,905	468	$ 3,000	$ 1,405,342	$23,337,563	$ 4.51
2040	143,359	47,786	14.30	1.0%	$9,104,750	3.15	3.0%	$16,447,009	$25,551,759	473	$ 3,000	$ 1,419,396	$24,132,363	$ 4.62
2041	144,793	48,264	14.45	1.0%	$9,287,250	3.24	3.0%	$17,086,093	$26,373,343	478	$ 3,000	$ 1,433,590	$24,939,753	$ 4.73
Total/Average					$196,139,000			$273,622,470	$469,761,470	18,865		$56,594,390	$413,167,080	**$ 3.45**

Notes:
(1) Period of capitalized interest estimated to be from May 1, 2011 through May 1, 2014.

TABLE B-6

Scenario Number Two

$100,000,000 Special Service Area Bonds, Series 2010

August 2007

Net Debt Service Schedule

Date	Principal	Coupon	Interest	Total P+I	CIF	Net New D/S
12/15/2010	-	-	-	-	-	-
12/15/2011	-	-	5,000,000.00	5,000,000.00	(5,000,000.00)	-
12/15/2012	-	-	5,000,000.00	5,000,000.00	(5,000,000.00)	-
12/15/2013	-	-	5,000,000.00	5,000,000.00	(5,000,000.00)	-
12/15/2014	525,000.00	5.000%	5,000,000.00	5,525,000.00	-	5,525,000.00
12/15/2015	665,000.00	5.000%	4,973,750.00	5,638,750.00	-	5,638,750.00
12/15/2016	810,000.00	5.000%	4,940,500.00	5,750,500.00	-	5,750,500.00
12/15/2017	965,000.00	5.000%	4,900,000.00	5,865,000.00	-	5,865,000.00
12/15/2018	1,130,000.00	5.000%	4,851,750.00	5,981,750.00	-	5,981,750.00
12/15/2019	1,305,000.00	5.000%	4,795,250.00	6,100,250.00	-	6,100,250.00
12/15/2020	1,495,000.00	5.000%	4,730,000.00	6,225,000.00	-	6,225,000.00
12/15/2021	1,695,000.00	5.000%	4,655,250.00	6,350,250.00	-	6,350,250.00
12/15/2022	1,905,000.00	5.000%	4,570,500.00	6,475,500.00	-	6,475,500.00
12/15/2023	2,130,000.00	5.000%	4,475,250.00	6,605,250.00	-	6,605,250.00
12/15/2024	2,370,000.00	5.000%	4,368,750.00	6,738,750.00	-	6,738,750.00
12/15/2025	2,620,000.00	5.000%	4,250,250.00	6,870,250.00	-	6,870,250.00
12/15/2026	2,890,000.00	5.000%	4,119,250.00	7,009,250.00	-	7,009,250.00
12/15/2027	3,175,000.00	5.000%	3,974,750.00	7,149,750.00	-	7,149,750.00
12/15/2028	3,475,000.00	5.000%	3,816,000.00	7,291,000.00	-	7,291,000.00
12/15/2029	3,795,000.00	5.000%	3,642,250.00	7,437,250.00	-	7,437,250.00
12/15/2030	4,135,000.00	5.000%	3,452,500.00	7,587,500.00	-	7,587,500.00
12/15/2031	4,495,000.00	5.000%	3,245,750.00	7,740,750.00	-	7,740,750.00
12/15/2032	4,870,000.00	5.000%	3,021,000.00	7,891,000.00	-	7,891,000.00
12/15/2033	5,275,000.00	5.000%	2,777,500.00	8,052,500.00	-	8,052,500.00
12/15/2034	5,700,000.00	5.000%	2,513,750.00	8,213,750.00	-	8,213,750.00
12/15/2035	6,150,000.00	5.000%	2,228,750.00	8,378,750.00	-	8,378,750.00
12/15/2036	6,620,000.00	5.000%	1,921,250.00	8,541,250.00	-	8,541,250.00
12/15/2037	7,125,000.00	5.000%	1,590,250.00	8,715,250.00	-	8,715,250.00
12/15/2038	7,655,000.00	5.000%	1,234,000.00	8,889,000.00	-	8,889,000.00
12/15/2039	8,215,000.00	5.000%	851,250.00	9,066,250.00	-	9,066,250.00
12/15/2040	8,810,000.00	5.000%	440,500.00	9,250,500.00	-	9,250,500.00
Total	**$100,000,000.00**	**-**	**$110,340,000.00**	**$210,340,000.00**	**(15,000,000.00)**	**$195,340,000.00**

TABLE B-7

Scenario Number Two

$78,410,000 Water Revenue Bonds, Series 2011

August 2007

Net Debt Service Schedule

Date	Principal	Coupon	Interest	Total P+I	CIF	Net New D/S
05/01/2011	-	-	-	-	-	-
05/01/2012	-	-	3,920,500.00	3,920,500.00	(3,920,500.00)	-
05/01/2013	-	-	3,920,500.00	3,920,500.00	(3,920,500.00)	-
05/01/2014	-	-	3,920,500.00	3,920,500.00	(3,920,500.00)	-
05/01/2015	415,000.00	5.000%	3,920,500.00	4,335,500.00	-	4,335,500.00
05/01/2016	520,000.00	5.000%	3,899,750.00	4,419,750.00	-	4,419,750.00
05/01/2017	635,000.00	5.000%	3,873,750.00	4,508,750.00	-	4,508,750.00
05/01/2018	755,000.00	5.000%	3,842,000.00	4,597,000.00	-	4,597,000.00
05/01/2019	885,000.00	5.000%	3,804,250.00	4,689,250.00	-	4,689,250.00
05/01/2020	1,025,000.00	5.000%	3,760,000.00	4,785,000.00	-	4,785,000.00
05/01/2021	1,170,000.00	5.000%	3,708,750.00	4,878,750.00	-	4,878,750.00
05/01/2022	1,330,000.00	5.000%	3,650,250.00	4,980,250.00	-	4,980,250.00
05/01/2023	1,495,000.00	5.000%	3,583,750.00	5,078,750.00	-	5,078,750.00
05/01/2024	1,670,000.00	5.000%	3,509,000.00	5,179,000.00	-	5,179,000.00
05/01/2025	1,855,000.00	5.000%	3,425,500.00	5,280,500.00	-	5,280,500.00
05/01/2026	2,055,000.00	5.000%	3,332,750.00	5,387,750.00	-	5,387,750.00
05/01/2027	2,265,000.00	5.000%	3,230,000.00	5,495,000.00	-	5,495,000.00
05/01/2028	2,490,000.00	5.000%	3,116,750.00	5,606,750.00	-	5,606,750.00
05/01/2029	2,725,000.00	5.000%	2,992,250.00	5,717,250.00	-	5,717,250.00
05/01/2030	2,975,000.00	5.000%	2,856,000.00	5,831,000.00	-	5,831,000.00
05/01/2031	3,240,000.00	5.000%	2,707,250.00	5,947,250.00	-	5,947,250.00
05/01/2032	3,525,000.00	5.000%	2,545,250.00	6,070,250.00	-	6,070,250.00
05/01/2033	3,820,000.00	5.000%	2,369,000.00	6,189,000.00	-	6,189,000.00
05/01/2034	4,135,000.00	5.000%	2,178,000.00	6,313,000.00	-	6,313,000.00
05/01/2035	4,470,000.00	5.000%	1,971,250.00	6,441,250.00	-	6,441,250.00
05/01/2036	4,820,000.00	5.000%	1,747,750.00	6,567,750.00	-	6,567,750.00
05/01/2037	5,195,000.00	5.000%	1,506,750.00	6,701,750.00	-	6,701,750.00
05/01/2038	5,585,000.00	5.000%	1,247,000.00	6,832,000.00	-	6,832,000.00
05/01/2039	6,005,000.00	5.000%	967,750.00	6,972,750.00	-	6,972,750.00
05/01/2040	6,445,000.00	5.000%	667,500.00	7,112,500.00	-	7,112,500.00
05/01/2041	6,905,000.00	5.000%	345,250.00	7,250,250.00	-	7,250,250.00
Total	**$78,410,000.00**	**-**	**$86,519,500.00**	**$164,929,500.00**	**(11,761,500.00)**	**$153,168,000.00**

TABLE B-8

Scenario Number Two

BOND ANALYSIS

August 2007

$100,000,000 Special Service Area Bonds, Series 2010
$78,410,000 Water Revenue Bonds, Series 2011
Debt Service - Estimated at 5%
2006 EAV - North Lake County Joint Action Water Agency: $1,973,204,829 (Incorporated and Unincorporated Areas)
SSA Tax Rate Assumption: $300,000 Value Home Assessed at 1/3 of Fair Market Value with $5,000 Homestead Exemption

												Per Home - SSA Tax Analysis (1)					
		$100,000,000		$ 78,410,000													
Levy Year	Calendar Year	**SSA** Bonds	Rate of Growth	**Water Revenue** Bonds	Rate of Growth	Total Debt Service		SSA EAV	Rate of Growth	SSA Tax Rate	Average Home Value	Rate of Growth	Equalized Assessed Valuation	EAV After Exemptions	Annual Tax $300,000 Home	Rate of Growth
2010	2011	(2)				(2)		$ 2,053,324,858	**Base**		**$ 300,000**	**Base**	**$ 100,000**	**$ 95,000**		
2011	2012	(2)		(3)		(2) (3)		2,094,391,355	2%		300,000	0%	100,000	95,000		
2012	2013	(2)		(3)		(2) (3)		2,136,279,182	2%		300,000	0%	100,000	95,000		
2013	2014	$ 5,525,000	N.A.	(3)		$ 5,525,000	(4)	2,179,004,765	2%	$ 0.25	300,000	0%	100,000	95,000	$ 241	
2014	2015	5,638,750	2%	$ 4,335,500	N.A.	9,974,250		2,222,584,861	2%	0.25	300,000	0%	100,000	95,000	241	0%
2015	2016	5,750,500	2%	4,419,750	2%	10,170,250		2,267,036,558	2%	0.25	300,000	0%	100,000	95,000	241	0%
2016	2017	5,865,000	2%	4,508,750	2%	10,373,750		2,312,377,289	2%	0.25	300,000	0%	100,000	95,000	241	0%
2017	2018	5,981,750	2%	4,597,000	2%	10,578,750		2,358,624,835	2%	0.25	300,000	0%	100,000	95,000	241	0%
2018	2019	6,100,250	2%	4,689,250	2%	10,789,500		2,405,797,332	2%	0.25	300,000	0%	100,000	95,000	241	0%
2019	2020	6,225,000	2%	4,785,000	2%	11,010,000		2,453,913,278	2%	0.25	300,000	0%	100,000	95,000	241	0%
2020	2021	6,350,250	2%	4,878,750	2%	11,229,000		2,502,991,544	2%	0.25	300,000	0%	100,000	95,000	241	0%
2021	2022	6,475,500	2%	4,980,250	2%	11,455,750		2,553,051,375	2%	0.25	300,000	0%	100,000	95,000	241	0%
2022	2023	6,605,250	2%	5,078,750	2%	11,684,000		2,604,112,402	2%	0.25	300,000	0%	100,000	95,000	241	0%
2023	2024	6,738,750	2%	5,179,000	2%	11,917,750		2,656,194,650	2%	0.25	300,000	0%	100,000	95,000	241	0%
2024	2025	6,870,250	2%	5,280,500	2%	12,150,750		2,709,318,543	2%	0.25	300,000	0%	100,000	95,000	241	0%
2025	2026	7,009,250	2%	5,387,750	2%	12,397,000		2,763,504,914	2%	0.25	300,000	0%	100,000	95,000	241	0%
2026	2027	7,149,750	2%	5,495,000	2%	12,644,750		2,818,775,012	2%	0.25	300,000	0%	100,000	95,000	241	0%
2027	2028	7,291,000	2%	5,606,750	2%	12,897,750		2,875,150,513	2%	0.25	300,000	0%	100,000	95,000	241	0%
2028	2029	7,437,250	2%	5,717,250	2%	13,154,500		2,932,653,523	2%	0.25	300,000	0%	100,000	95,000	241	0%
2029	2030	7,587,500	2%	5,831,000	2%	13,418,500		2,991,306,593	2%	0.25	300,000	0%	100,000	95,000	241	0%
2030	2031	7,740,750	2%	5,947,250	2%	13,688,000		3,051,132,725	2%	0.25	300,000	0%	100,000	95,000	241	0%
2031	2032	7,891,000	2%	6,070,250	2%	13,961,250		3,112,155,380	2%	0.25	300,000	0%	100,000	95,000	241	0%
2032	2033	8,052,500	2%	6,189,000	2%	14,241,500		3,174,398,487	2%	0.25	300,000	0%	100,000	95,000	241	0%
2033	2034	8,213,750	2%	6,313,000	2%	14,526,750		3,237,886,457	2%	0.25	300,000	0%	100,000	95,000	241	0%
2034	2035	8,378,750	2%	6,441,250	2%	14,820,000		3,302,644,186	2%	0.25	300,000	0%	100,000	95,000	241	0%
2035	2036	8,541,250	2%	6,567,750	2%	15,109,000		3,368,697,070	2%	0.25	300,000	0%	100,000	95,000	241	0%
2036	2037	8,715,250	2%	6,701,750	2%	15,417,000		3,436,071,011	2%	0.25	300,000	0%	100,000	95,000	241	0%
2037	2038	8,889,000	2%	6,832,000	2%	15,721,000		3,504,792,432	2%	0.25	300,000	0%	100,000	95,000	241	0%
2038	2039	9,066,250	2%	6,972,750	2%	16,039,000		3,574,888,280	2%	0.25	300,000	0%	100,000	95,000	241	0%
2039	2040	9,250,500	2%	7,112,500	2%	16,363,000		3,646,386,046	2%	0.25	300,000	0%	100,000	95,000	241	0%
2040	2041		N.A.	7,250,250	2%	7,250,250		3,719,313,767	2%	-						
		$ 195,340,000		$ 153,168,000		$ 348,508,000								Average	$ 241	

Notes: (1) Homes are likely to grow in value. Non inflationary growth due to new development will have the impact of lowering the special service area taxes.
(2) Period of capitalized interest estimated to be from December 15, 2010 through December 15, 2013.
(3) Period of capitalized interest estimated to be from May 1, 2011 through May 1, 2014.
(4) Special service area debt service only. Water revenue bonds are paid from capitalized interest.

TABLE B-9
Scenario Number Two
WATER UNIT RATES
August 2007

$100,000,000 Special Service Area Bonds, Series 2010
$78,410,000 Water Revenue Bonds, Series 2011

						OM & R Expenses				Connection Fee Revenue				
Calendar Year	Population	Number of Customers	Average Water Demand (MGD)	Rate of Growth (%)	Water Revenue Bonds Debt Service	OM & R ($/1,000 gal)	Inflation	Annual OM & R	OM & R Plus Debt	New Customers	Connection Fee	Annual Connection Fee Revenue	Total Revenue Required	Water Rate ($/1,000 gal)
2005	70,974	23,658	6.10	Actual										
2006	72,708	24,236	6.29	3.1%										
2007	74,485	24,828	6.48	3.1%										
2008	76,305	25,435	6.68	3.1%										
2009	78,169	26,056	6.88	3.1%										
2010	80,080	26,693	7.09	3.1%										
2011	82,036	27,345	7.31	3.1%										
2012	84,041	28,014	7.53	3.1%	(1)									
2013	86,094	28,698	7.76	3.1%	(1)									
2014	88,198	29,399	8.00	3.1%	(1)									
2015	90,353	30,118	8.24	3.1%	$4,335,500	1.50	3.0%	$4,513,256	$8,848,756	718	$ 3,000	$ 2,155,136	$6,693,620	$ 2.22
2016	92,561	30,854	8.50	3.1%	$4,419,750	1.55	3.0%	$4,806,268	$9,226,018	736	$ 3,000	$ 2,207,797	$7,018,221	$ 2.26
2017	94,823	31,608	8.76	3.1%	$4,508,750	1.60	3.0%	$5,112,977	$9,621,727	754	$ 3,000	$ 2,261,745	$7,359,982	$ 2.30
2018	97,140	32,380	9.02	3.1%	$4,597,000	1.65	3.0%	$5,433,947	$10,030,947	772	$ 3,000	$ 2,317,011	$7,713,936	$ 2.34
2019	99,513	33,171	9.30	3.1%	$4,689,250	1.70	3.0%	$5,769,763	$10,459,013	791	$ 3,000	$ 2,373,627	$8,085,386	$ 2.38
2020	101,945	33,982	9.58	3.1%	$4,785,000	1.75	3.0%	$6,121,033	$10,906,033	811	$ 3,000	$ 2,431,627	$8,474,406	$ 2.42
2021	104,436	34,812	9.88	3.1%	$4,878,750	1.80	3.0%	$6,488,387	$11,367,137	830	$ 3,000	$ 2,491,044	$8,876,093	$ 2.46
2022	106,988	35,663	10.18	3.1%	$4,980,250	1.85	3.0%	$6,872,482	$11,852,732	851	$ 3,000	$ 2,551,913	$9,300,818	$ 2.50
2023	109,602	36,534	10.49	3.1%	$5,078,750	1.91	3.0%	$7,312,280	$12,391,030	871	$ 3,000	$ 2,614,270	$9,776,760	$ 2.55
2024	112,280	37,427	10.81	3.1%	$5,179,000	1.97	3.0%	$7,772,546	$12,951,546	893	$ 3,000	$ 2,678,150	$10,273,396	$ 2.60
2025	115,024	38,341	11.14	3.1%	$5,280,500	2.03	3.0%	$8,254,118	$13,534,618	915	$ 3,000	$ 2,743,591	$10,791,027	$ 2.65
2026	117,835	39,278	11.48	3.1%	$5,387,750	2.09	3.0%	$8,757,871	$14,145,621	937	$ 3,000	$ 2,810,631	$11,334,990	$ 2.71
2027	120,714	40,238	11.83	3.1%	$5,495,000	2.15	3.0%	$9,284,709	$14,779,709	960	$ 3,000	$ 2,879,309	$11,900,400	$ 2.76
2028	123,664	41,221	12.19	3.1%	$5,606,750	2.21	3.0%	$9,835,574	$15,442,324	983	$ 3,000	$ 2,949,666	$12,492,658	$ 2.81
2029	126,685	42,228	12.57	3.1%	$5,717,250	2.28	3.0%	$10,457,308	$16,174,558	1,007	$ 3,000	$ 3,021,741	$13,152,816	$ 2.87
2030	129,781	43,260	12.95	3.1%	$5,831,000	2.35	3.0%	$11,107,863	$16,938,863	1,032	$ 3,000	$ 3,095,578	$13,843,285	$ 2.93
2031	131,079	43,693	13.08	1.0%	$5,947,250	2.42	3.0%	$11,553,122	$17,500,372	433	$ 3,000	$ 1,297,810	$16,202,562	$ 3.39
2032	132,390	44,130	13.21	1.0%	$6,070,250	2.49	3.0%	$12,006,177	$18,076,427	437	$ 3,000	$ 1,310,788	$16,765,639	$ 3.48
2033	133,713	44,571	13.34	1.0%	$6,189,000	2.56	3.0%	$12,467,137	$18,656,137	441	$ 3,000	$ 1,323,896	$17,332,241	$ 3.56
2034	135,051	45,017	13.48	1.0%	$6,313,000	2.64	3.0%	$12,985,302	$19,298,302	446	$ 3,000	$ 1,337,135	$17,961,167	$ 3.65
2035	136,401	45,467	13.61	1.0%	$6,441,250	2.72	3.0%	$13,512,584	$19,953,834	450	$ 3,000	$ 1,350,506	$18,603,328	$ 3.74
2036	137,765	45,922	13.75	1.0%	$6,567,750	2.80	3.0%	$14,049,113	$20,616,863	455	$ 3,000	$ 1,364,011	$19,252,852	$ 3.84
2037	139,143	46,381	13.88	1.0%	$6,701,750	2.88	3.0%	$14,595,021	$21,296,771	459	$ 3,000	$ 1,377,651	$19,919,120	$ 3.93
2038	140,534	46,845	14.02	1.0%	$6,832,000	2.97	3.0%	$15,201,627	$22,033,627	464	$ 3,000	$ 1,391,428	$20,642,199	$ 4.03
2039	141,940	47,313	14.16	1.0%	$6,972,750	3.06	3.0%	$15,818,905	$22,791,655	468	$ 3,000	$ 1,405,342	$21,386,313	$ 4.14
2040	143,359	47,786	14.30	1.0%	$7,112,500	3.15	3.0%	$16,447,009	$23,559,509	473	$ 3,000	$ 1,419,396	$22,140,113	$ 4.24
2041	144,793	48,264	14.45	1.0%	$7,250,250	3.24	3.0%	$17,086,093	$24,336,343	478	$ 3,000	$ 1,433,590	$22,902,753	$ 4.34
Total/Average					$153,168,000			$273,622,470	$426,790,470	18,865		$56,594,390	$370,196,080	**$ 3.08**

Notes:
(1) Period of capitalized interest estimated to be from May 1, 2011 through May 1, 2014.

TABLE B-10

Scenario Number Three

$89,205,000 Special Service Area Bonds, Series 2010

August 2007

Net Debt Service Schedule

Date	Principal	Coupon	Interest	Total P+I	CIF	Net New D/S
12/15/2010	-	-	-	-	-	-
12/15/2011	-	-	4,460,250.00	4,460,250.00	(4,460,250.00)	-
12/15/2012	-	-	4,460,250.00	4,460,250.00	(4,460,250.00)	-
12/15/2013	-	-	4,460,250.00	4,460,250.00	(4,460,250.00)	-
12/15/2014	470,000.00	5.000%	4,460,250.00	4,930,250.00	-	4,930,250.00
12/15/2015	590,000.00	5.000%	4,436,750.00	5,026,750.00	-	5,026,750.00
12/15/2016	720,000.00	5.000%	4,407,250.00	5,127,250.00	-	5,127,250.00
12/15/2017	860,000.00	5.000%	4,371,250.00	5,231,250.00	-	5,231,250.00
12/15/2018	1,010,000.00	5.000%	4,328,250.00	5,338,250.00	-	5,338,250.00
12/15/2019	1,165,000.00	5.000%	4,277,750.00	5,442,750.00	-	5,442,750.00
12/15/2020	1,335,000.00	5.000%	4,219,500.00	5,554,500.00	-	5,554,500.00
12/15/2021	1,510,000.00	5.000%	4,152,750.00	5,662,750.00	-	5,662,750.00
12/15/2022	1,700,000.00	5.000%	4,077,250.00	5,777,250.00	-	5,777,250.00
12/15/2023	1,900,000.00	5.000%	3,992,250.00	5,892,250.00	-	5,892,250.00
12/15/2024	2,110,000.00	5.000%	3,897,250.00	6,007,250.00	-	6,007,250.00
12/15/2025	2,340,000.00	5.000%	3,791,750.00	6,131,750.00	-	6,131,750.00
12/15/2026	2,580,000.00	5.000%	3,674,750.00	6,254,750.00	-	6,254,750.00
12/15/2027	2,830,000.00	5.000%	3,545,750.00	6,375,750.00	-	6,375,750.00
12/15/2028	3,100,000.00	5.000%	3,404,250.00	6,504,250.00	-	6,504,250.00
12/15/2029	3,385,000.00	5.000%	3,249,250.00	6,634,250.00	-	6,634,250.00
12/15/2030	3,690,000.00	5.000%	3,080,000.00	6,770,000.00	-	6,770,000.00
12/15/2031	4,010,000.00	5.000%	2,895,500.00	6,905,500.00	-	6,905,500.00
12/15/2032	4,345,000.00	5.000%	2,695,000.00	7,040,000.00	-	7,040,000.00
12/15/2033	4,705,000.00	5.000%	2,477,750.00	7,182,750.00	-	7,182,750.00
12/15/2034	5,085,000.00	5.000%	2,242,500.00	7,327,500.00	-	7,327,500.00
12/15/2035	5,485,000.00	5.000%	1,988,250.00	7,473,250.00	-	7,473,250.00
12/15/2036	5,910,000.00	5.000%	1,714,000.00	7,624,000.00	-	7,624,000.00
12/15/2037	6,355,000.00	5.000%	1,418,500.00	7,773,500.00	-	7,773,500.00
12/15/2038	6,830,000.00	5.000%	1,100,750.00	7,930,750.00	-	7,930,750.00
12/15/2039	7,330,000.00	5.000%	759,250.00	8,089,250.00	-	8,089,250.00
12/15/2040	7,855,000.00	5.000%	392,750.00	8,247,750.00	-	8,247,750.00
Total	**$89,205,000.00**	**-**	**$98,431,250.00**	**$187,636,250.00**	**(13,380,750.00)**	**$174,255,500.00**

TABLE B-11

Scenario Number Three

$89,205,000 Water Revenue Bonds, Series 2011

August 2007

Net Debt Service Schedule

Date	Principal	Coupon	Interest	Total P+I	CIF	Net New D/S
05/01/2011	-	-	-	-	-	-
05/01/2012	-	-	4,460,250.00	4,460,250.00	(4,460,250.00)	-
05/01/2013	-	-	4,460,250.00	4,460,250.00	(4,460,250.00)	-
05/01/2014	-	-	4,460,250.00	4,460,250.00	(4,460,250.00)	-
05/01/2015	470,000.00	5.000%	4,460,250.00	4,930,250.00	-	4,930,250.00
05/01/2016	590,000.00	5.000%	4,436,750.00	5,026,750.00	-	5,026,750.00
05/01/2017	720,000.00	5.000%	4,407,250.00	5,127,250.00	-	5,127,250.00
05/01/2018	860,000.00	5.000%	4,371,250.00	5,231,250.00	-	5,231,250.00
05/01/2019	1,010,000.00	5.000%	4,328,250.00	5,338,250.00	-	5,338,250.00
05/01/2020	1,165,000.00	5.000%	4,277,750.00	5,442,750.00	-	5,442,750.00
05/01/2021	1,335,000.00	5.000%	4,219,500.00	5,554,500.00	-	5,554,500.00
05/01/2022	1,510,000.00	5.000%	4,152,750.00	5,662,750.00	-	5,662,750.00
05/01/2023	1,700,000.00	5.000%	4,077,250.00	5,777,250.00	-	5,777,250.00
05/01/2024	1,900,000.00	5.000%	3,992,250.00	5,892,250.00	-	5,892,250.00
05/01/2025	2,110,000.00	5.000%	3,897,250.00	6,007,250.00	-	6,007,250.00
05/01/2026	2,340,000.00	5.000%	3,791,750.00	6,131,750.00	-	6,131,750.00
05/01/2027	2,580,000.00	5.000%	3,674,750.00	6,254,750.00	-	6,254,750.00
05/01/2028	2,830,000.00	5.000%	3,545,750.00	6,375,750.00	-	6,375,750.00
05/01/2029	3,100,000.00	5.000%	3,404,250.00	6,504,250.00	-	6,504,250.00
05/01/2030	3,385,000.00	5.000%	3,249,250.00	6,634,250.00	-	6,634,250.00
05/01/2031	3,690,000.00	5.000%	3,080,000.00	6,770,000.00	-	6,770,000.00
05/01/2032	4,010,000.00	5.000%	2,895,500.00	6,905,500.00	-	6,905,500.00
05/01/2033	4,345,000.00	5.000%	2,695,000.00	7,040,000.00	-	7,040,000.00
05/01/2034	4,705,000.00	5.000%	2,477,750.00	7,182,750.00	-	7,182,750.00
05/01/2035	5,085,000.00	5.000%	2,242,500.00	7,327,500.00	-	7,327,500.00
05/01/2036	5,485,000.00	5.000%	1,988,250.00	7,473,250.00	-	7,473,250.00
05/01/2037	5,910,000.00	5.000%	1,714,000.00	7,624,000.00	-	7,624,000.00
05/01/2038	6,355,000.00	5.000%	1,418,500.00	7,773,500.00	-	7,773,500.00
05/01/2039	6,830,000.00	5.000%	1,100,750.00	7,930,750.00	-	7,930,750.00
05/01/2040	7,330,000.00	5.000%	759,250.00	8,089,250.00	-	8,089,250.00
05/01/2041	7,855,000.00	5.000%	392,750.00	8,247,750.00	-	8,247,750.00
Total	**$89,205,000.00**	**-**	**$98,431,250.00**	**$187,636,250.00**	**(13,380,750.00)**	**$174,255,500.00**

TABLE B-12

Scenario Number Three

BOND ANALYSIS

August 2007

$89,205,000 Special Service Area Bonds, Series 2010
$89,205,000 Water Revenue Bonds, Series 2011
Debt Service - Estimated at 5%
2006 EAV - North Lake County Joint Action Water Agency: $1,973,204,829 (Incorporated and Unincorporated Areas)
SSA Tax Rate Assumption: $300,000 Value Home Assessed at 1/3 of Fair Market Value with $5,000 Homestead Exemption

												Per Home - SSA Tax Analysis (1)					
Levy Year	Calendar Year	$89,205,000 **SSA** Bonds	Rate of Growth	$89,205,000 **Water Revenue** Bonds	Rate of Growth	Total Debt Service		SSA EAV	Rate of Growth	SSA Tax Rate	Average Home Value	Rate of Growth	Equalized Assessed Valuation	EAV After Exemptions	Annual Tax $300,000 Home	Rate of Growth
2010	2011	(2)				(2)		$ 2,053,324,858	**Base**		**$ 300,000**	**Base**	**$ 100,000**	**$ 95,000**		
2011	2012	(2)		(3)		(2) (3)		2,094,391,355	2%		300,000	0%	100,000	95,000		
2012	2013	(2)		(3)		(2) (3)		2,136,279,182	2%		300,000	0%	100,000	95,000		
2013	2014	$ 4,930,250	N.A.	(3)		$ 4,930,250	(4)	2,179,004,765	2%	$ 0.23	300,000	0%	100,000	95,000	$ 215	
2014	2015	5,026,750	2%	$ 4,930,250	N.A.	9,957,000		2,222,584,861	2%	0.23	300,000	0%	100,000	95,000	215	0%
2015	2016	5,127,250	2%	5,026,750	2%	10,154,000		2,267,036,558	2%	0.23	300,000	0%	100,000	95,000	215	0%
2016	2017	5,231,250	2%	5,127,250	2%	10,358,500		2,312,377,289	2%	0.23	300,000	0%	100,000	95,000	215	0%
2017	2018	5,338,250	2%	5,231,250	2%	10,569,500		2,358,624,835	2%	0.23	300,000	0%	100,000	95,000	215	0%
2018	2019	5,442,750	2%	5,338,250	2%	10,781,000		2,405,797,332	2%	0.23	300,000	0%	100,000	95,000	215	0%
2019	2020	5,554,500	2%	5,442,750	2%	10,997,250		2,453,913,278	2%	0.23	300,000	0%	100,000	95,000	215	0%
2020	2021	5,662,750	2%	5,554,500	2%	11,217,250		2,502,991,544	2%	0.23	300,000	0%	100,000	95,000	215	0%
2021	2022	5,777,250	2%	5,662,750	2%	11,440,000		2,553,051,375	2%	0.23	300,000	0%	100,000	95,000	215	0%
2022	2023	5,892,250	2%	5,777,250	2%	11,669,500		2,604,112,402	2%	0.23	300,000	0%	100,000	95,000	215	0%
2023	2024	6,007,250	2%	5,892,250	2%	11,899,500		2,656,194,650	2%	0.23	300,000	0%	100,000	95,000	215	0%
2024	2025	6,131,750	2%	6,007,250	2%	12,139,000		2,709,318,543	2%	0.23	300,000	0%	100,000	95,000	215	0%
2025	2026	6,254,750	2%	6,131,750	2%	12,386,500		2,763,504,914	2%	0.23	300,000	0%	100,000	95,000	215	0%
2026	2027	6,375,750	2%	6,254,750	2%	12,630,500		2,818,775,012	2%	0.23	300,000	0%	100,000	95,000	215	0%
2027	2028	6,504,250	2%	6,375,750	2%	12,880,000		2,875,150,513	2%	0.23	300,000	0%	100,000	95,000	215	0%
2028	2029	6,634,250	2%	6,504,250	2%	13,138,500		2,932,653,523	2%	0.23	300,000	0%	100,000	95,000	215	0%
2029	2030	6,770,000	2%	6,634,250	2%	13,404,250		2,991,306,593	2%	0.23	300,000	0%	100,000	95,000	215	0%
2030	2031	6,905,500	2%	6,770,000	2%	13,675,500		3,051,132,725	2%	0.23	300,000	0%	100,000	95,000	215	0%
2031	2032	7,040,000	2%	6,905,500	2%	13,945,500		3,112,155,380	2%	0.23	300,000	0%	100,000	95,000	215	0%
2032	2033	7,182,750	2%	7,040,000	2%	14,222,750		3,174,398,487	2%	0.23	300,000	0%	100,000	95,000	215	0%
2033	2034	7,327,500	2%	7,182,750	2%	14,510,250		3,237,886,457	2%	0.23	300,000	0%	100,000	95,000	215	0%
2034	2035	7,473,250	2%	7,327,500	2%	14,800,750		3,302,644,186	2%	0.23	300,000	0%	100,000	95,000	215	0%
2035	2036	7,624,000	2%	7,473,250	2%	15,097,250		3,368,697,070	2%	0.23	300,000	0%	100,000	95,000	215	0%
2036	2037	7,773,500	2%	7,624,000	2%	15,397,500		3,436,071,011	2%	0.23	300,000	0%	100,000	95,000	215	0%
2037	2038	7,930,750	2%	7,773,500	2%	15,704,250		3,504,792,432	2%	0.23	300,000	0%	100,000	95,000	215	0%
2038	2039	8,089,250	2%	7,930,750	2%	16,020,000		3,574,888,280	2%	0.23	300,000	0%	100,000	95,000	215	0%
2039	2040	8,247,750	2%	8,089,250	2%	16,337,000		3,646,386,046	2%	0.23	300,000	0%	100,000	95,000	215	0%
2040	2041		N.A.	8,247,750	2%	8,247,750		3,719,313,767	2%	-						
		$ 174,255,500		$ 174,255,500		$ 348,511,000								Average	$ 215	

Notes: (1) Homes are likely to grow in value. Non inflationary growth due to new development will have the impact of lowering the special service area taxes.
(2) Period of capitalized interest estimated to be from December 15, 2010 through December 15, 2013.
(3) Period of capitalized interest estimated to be from May 1, 2011 through May 1, 2014.
(4) Special service area debt service only. Water revenue bonds are paid from capitalized interest.

TABLE B-13
Scenario Number Three
WATER UNIT RATES
August 2007

$89,205,000 Special Service Area Bonds, Series 2010
$89,205,000 Water Revenue Bonds, Series 2011

						OM & R Expenses				Connection Fee Revenue				
Calendar Year	Population	Number of Customers	Average Water Demand (MGD)	Rate of Growth (%)	Water Revenue Bonds Debt Service	OM & R ($/1,000 gal)	Inflation	Annual OM & R	OM & R Plus Debt	New Customers	Connection Fee	Annual Connection Fee Revenue	Total Revenue Required	Water Rate ($/1,000 gal)
2005	70,974	23,658	6.10	Actual										
2006	72,708	24,236	6.29	3.1%										
2007	74,485	24,828	6.48	3.1%										
2008	76,305	25,435	6.68	3.1%										
2009	78,169	26,056	6.88	3.1%										
2010	80,080	26,693	7.09	3.1%										
2011	82,036	27,345	7.31	3.1%										
2012	84,041	28,014	7.53	3.1%	(1)									
2013	86,094	28,698	7.76	3.1%	(1)									
2014	88,198	29,399	8.00	3.1%	(1)									
2015	90,353	30,118	8.24	3.1%	$4,930,250	1.50	3.0%	$4,513,256	$9,443,506	718	$ 3,000	$ 2,155,136	$7,288,370	$ 2.42
2016	92,561	30,854	8.50	3.1%	$5,026,750	1.55	3.0%	$4,806,268	$9,833,018	736	$ 3,000	$ 2,207,797	$7,625,221	$ 2.46
2017	94,823	31,608	8.76	3.1%	$5,127,250	1.60	3.0%	$5,112,977	$10,240,227	754	$ 3,000	$ 2,261,745	$7,978,482	$ 2.50
2018	97,140	32,380	9.02	3.1%	$5,231,250	1.65	3.0%	$5,433,947	$10,665,197	772	$ 3,000	$ 2,317,011	$8,348,186	$ 2.53
2019	99,513	33,171	9.30	3.1%	$5,338,250	1.70	3.0%	$5,769,763	$11,108,013	791	$ 3,000	$ 2,373,627	$8,734,386	$ 2.57
2020	101,945	33,982	9.58	3.1%	$5,442,750	1.75	3.0%	$6,121,033	$11,563,783	811	$ 3,000	$ 2,431,627	$9,132,156	$ 2.61
2021	104,436	34,812	9.88	3.1%	$5,554,500	1.80	3.0%	$6,488,387	$12,042,887	830	$ 3,000	$ 2,491,044	$9,551,843	$ 2.65
2022	106,988	35,663	10.18	3.1%	$5,662,750	1.85	3.0%	$6,872,482	$12,535,232	851	$ 3,000	$ 2,551,913	$9,983,318	$ 2.69
2023	109,602	36,534	10.49	3.1%	$5,777,250	1.91	3.0%	$7,312,280	$13,089,530	871	$ 3,000	$ 2,614,270	$10,475,260	$ 2.74
2024	112,280	37,427	10.81	3.1%	$5,892,250	1.97	3.0%	$7,772,546	$13,664,796	893	$ 3,000	$ 2,678,150	$10,986,646	$ 2.78
2025	115,024	38,341	11.14	3.1%	$6,007,250	2.03	3.0%	$8,254,118	$14,261,368	915	$ 3,000	$ 2,743,591	$11,517,777	$ 2.83
2026	117,835	39,278	11.48	3.1%	$6,131,750	2.09	3.0%	$8,757,871	$14,889,621	937	$ 3,000	$ 2,810,631	$12,078,990	$ 2.88
2027	120,714	40,238	11.83	3.1%	$6,254,750	2.15	3.0%	$9,284,709	$15,539,459	960	$ 3,000	$ 2,879,309	$12,660,150	$ 2.93
2028	123,664	41,221	12.19	3.1%	$6,375,750	2.21	3.0%	$9,835,574	$16,211,324	983	$ 3,000	$ 2,949,666	$13,261,658	$ 2.98
2029	126,685	42,228	12.57	3.1%	$6,504,250	2.28	3.0%	$10,457,308	$16,961,558	1,007	$ 3,000	$ 3,021,741	$13,939,816	$ 3.04
2030	129,781	43,260	12.95	3.1%	$6,634,250	2.35	3.0%	$11,107,863	$17,742,113	1,032	$ 3,000	$ 3,095,578	$14,646,535	$ 3.10
2031	131,079	43,693	13.08	1.0%	$6,770,000	2.42	3.0%	$11,553,122	$18,323,122	433	$ 3,000	$ 1,297,810	$17,025,312	$ 3.57
2032	132,390	44,130	13.21	1.0%	$6,905,500	2.49	3.0%	$12,006,177	$18,911,677	437	$ 3,000	$ 1,310,788	$17,600,889	$ 3.65
2033	133,713	44,571	13.34	1.0%	$7,040,000	2.56	3.0%	$12,467,137	$19,507,137	441	$ 3,000	$ 1,323,896	$18,183,241	$ 3.73
2034	135,051	45,017	13.48	1.0%	$7,182,750	2.64	3.0%	$12,985,302	$20,168,052	446	$ 3,000	$ 1,337,135	$18,830,917	$ 3.83
2035	136,401	45,467	13.61	1.0%	$7,327,500	2.72	3.0%	$13,512,584	$20,840,084	450	$ 3,000	$ 1,350,506	$19,489,578	$ 3.92
2036	137,765	45,922	13.75	1.0%	$7,473,250	2.80	3.0%	$14,049,113	$21,522,363	455	$ 3,000	$ 1,364,011	$20,158,352	$ 4.02
2037	139,143	46,381	13.88	1.0%	$7,624,000	2.88	3.0%	$14,595,021	$22,219,021	459	$ 3,000	$ 1,377,651	$20,841,370	$ 4.11
2038	140,534	46,845	14.02	1.0%	$7,773,500	2.97	3.0%	$15,201,627	$22,975,127	464	$ 3,000	$ 1,391,428	$21,583,699	$ 4.22
2039	141,940	47,313	14.16	1.0%	$7,930,750	3.06	3.0%	$15,818,905	$23,749,655	468	$ 3,000	$ 1,405,342	$22,344,313	$ 4.32
2040	143,359	47,786	14.30	1.0%	$8,089,250	3.15	3.0%	$16,447,009	$24,536,259	473	$ 3,000	$ 1,419,396	$23,116,863	$ 4.43
2041	144,793	48,264	14.45	1.0%	$8,247,750	3.24	3.0%	$17,086,093	$25,333,843	478	$ 3,000	$ 1,433,590	$23,900,253	$ 4.53
Total/Average					$174,255,500			$273,622,470	$447,877,970	18,865		$56,594,390	$391,283,580	**$ 3.26**

Notes:
(1) Period of capitalized interest estimated to be from May 1, 2011 through May 1, 2014.

TABLE B-14
WATER RATE SUMMARY
August 2007

Scenario	Special Service Area Bonds	Water Revenue Bonds	Annual Tax on $300,000 Home	Year 2015 Water Rate ($/1,000 gal)	Annual Home Water Bill (1)	Total Annual Residential Charge
1	$78,000,000	$100,410,000	$188	$ 2.63	$ 240	$428
2	$100,000,000	$78,410,000	$241	$ 2.22	$ 203	$444
3	$89,205,000	$89,205,000	$215	$ 2.42	$ 221	$436

Notes:
(1) Based on an annual consumption of 91,250 gallons.