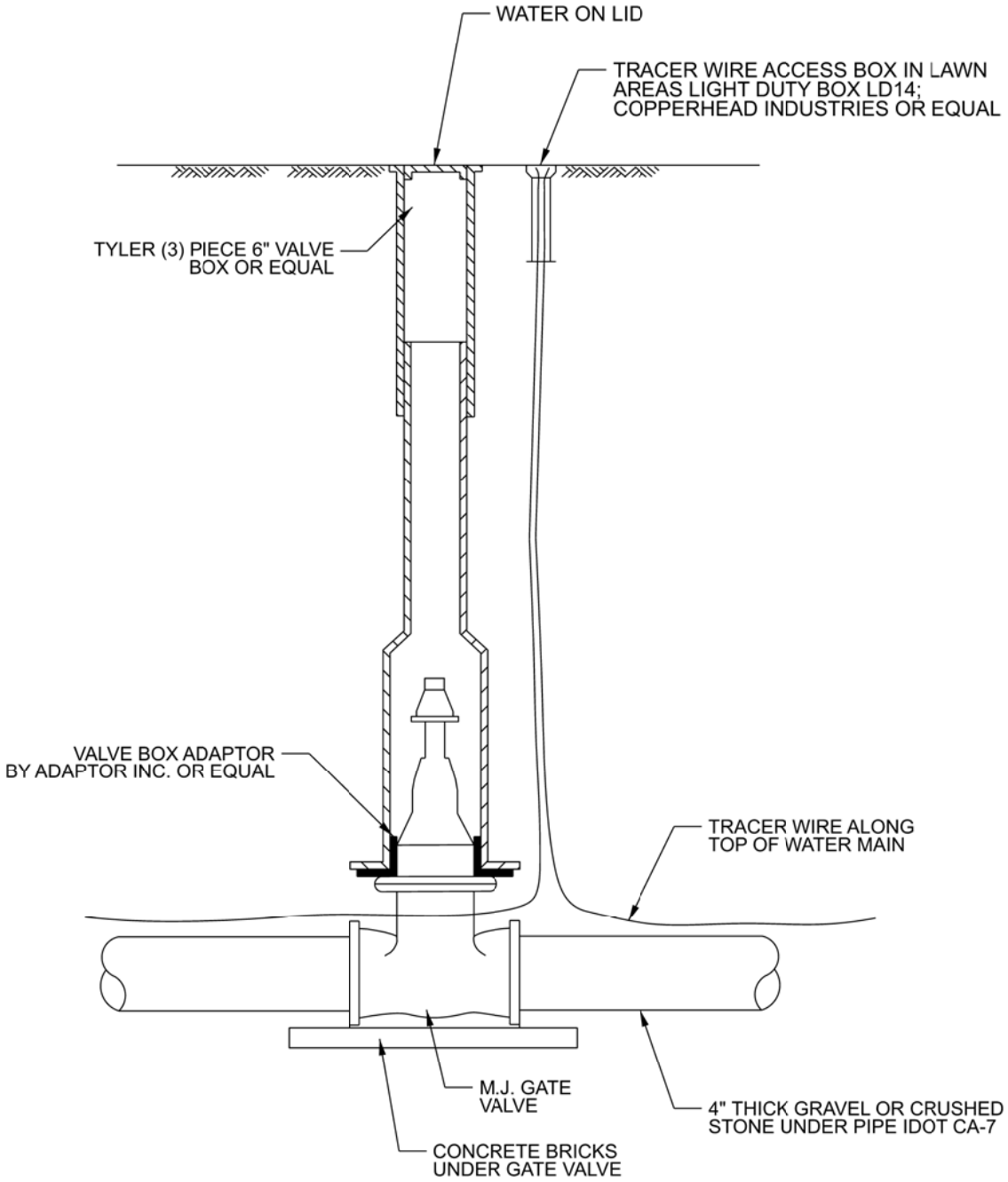

NOTE:

1. VALVE SHALL HAVE STAINLESS STEEL HARDWARE

Lake County Department of Public Works	VALVE BOX	DATE: 6/26/15	ID: 11
		REVISIONS	DATE
		ENG-MAIN. UPDATE	7/24/18
		ENG-MAIN. UPDATE	9/20/18