RECOMMENDED OFFSET FROM OPEN TRENCH TO FACE OF TREE	
TREE DIAMETER IN.	OFFSET - "X" FT.
0-2	1
3-4	2
5-9	5
10-14	10
15-19	12
OVER 19	15

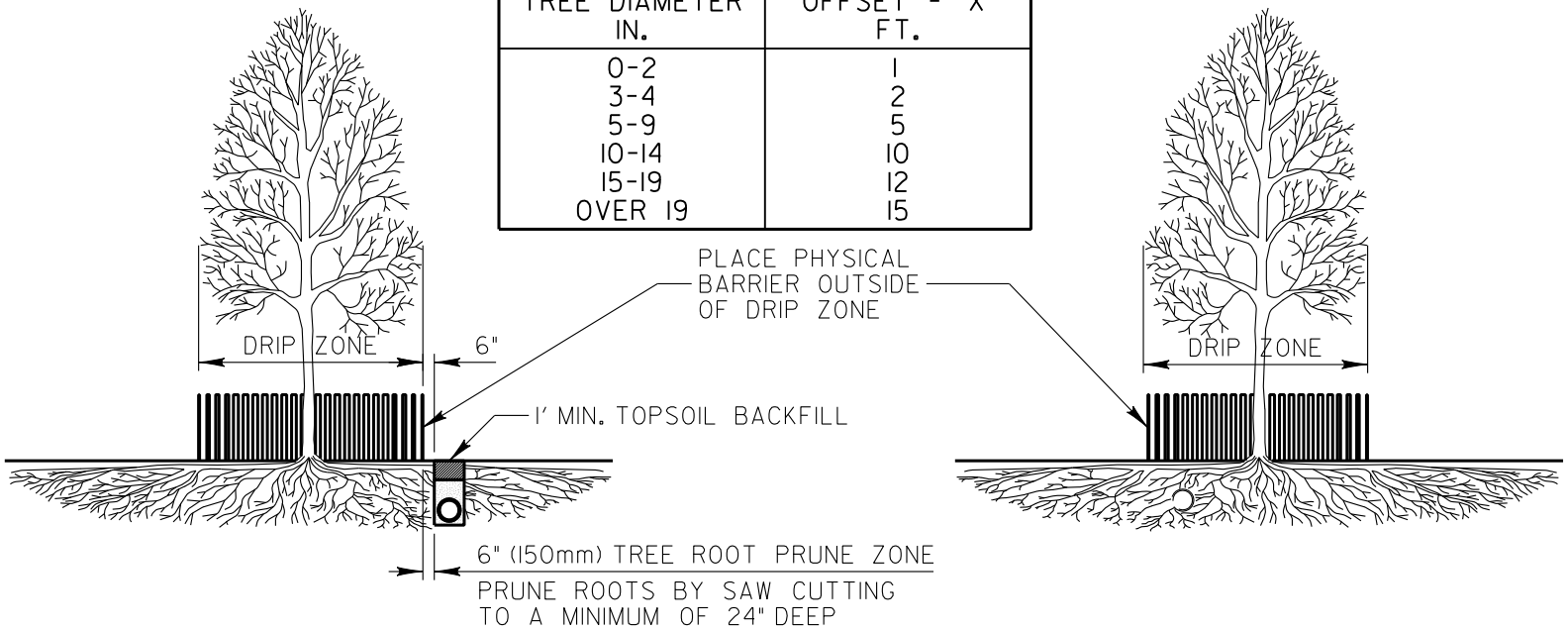

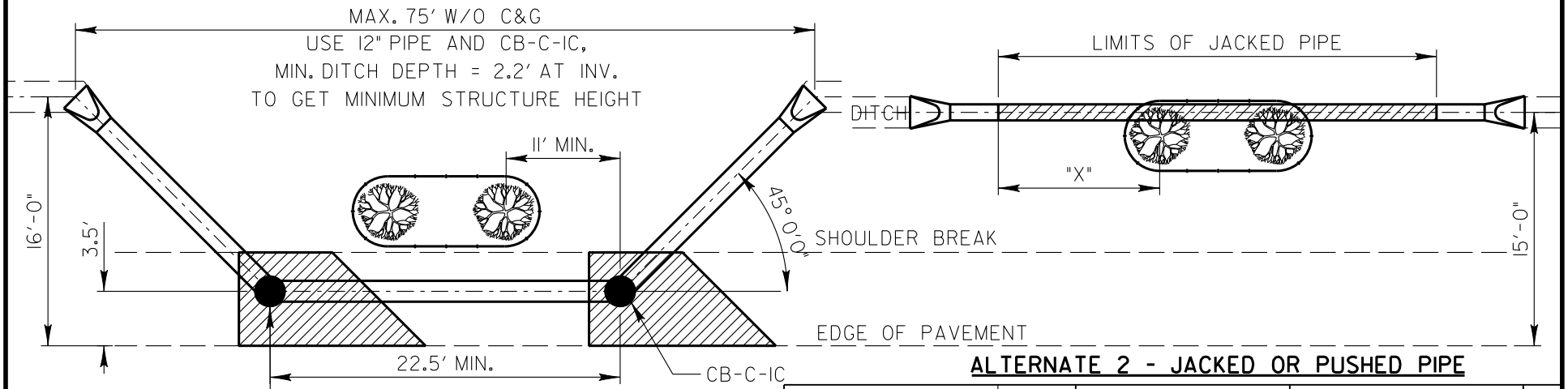

SEE ALSO LC4820 "HOT-MIX ASPHALT APRON FOR STRUCTURES IN AGGREGATE SHOULDERS."

ALTERNATE 1 - RELOCATED PIPE

ALTERNATE 2 - JACKED OR PUSHED PIPE

SCALE: 1" = 10'

REVISIONS	DATE

LakeCounty Division of Transportation

APPROVED BY: M. G. ZEMAITIS
DATE: APRIL 1, 2007

TREE PRESERVATION WITH STORM SEWER IN UNCURBED AREAS

LC5400